Energy 34 (2009) 680–688

Contents lists available at ScienceDirect

Energy

journal homepage: www.elsevier.com/locate/energy

Reduction of irreversibility generation in sugar and ethanol production from sugarcane

A.V. Ensinas [a,*], M. Modesto [b], S.A. Nebra [a], L. Serra [c]

[a] Mechanical Engineering Faculty, State University of Campinas, Cid. Universitária Zeferino Vaz, P.O. Box 6122, Campinas, Brazil
[b] Center of Engineering, Modeling and Applied Social Science, Federal University of ABC, Zip Code 09210-170, Santo André, Brazil
[c] Mechanical Engineering Department, University of Zaragoza, C. Maria de Luna 3, 50018 Zaragoza, Spain

ARTICLE INFO

Article history:
Received 13 November 2007
Available online 9 July 2008

Keywords:
Cogeneration
Exergy analysis
Ethanol
Sugarcane
Thermal integration

ABSTRACT

Sugarcane is one of the most important industries of the Brazilian economy, and its main products are sugar and ethanol. Most of the industrial plants produce both products in an integrated process, in which the sugarcane bagasse is a by-product that can be used as a fuel in the cogeneration system. The bagasse is used as the only fuel of the plant, supplying all energy required for the process, and also producing electricity surplus that may be sold to the grid. In this paper, exergy analysis is used to assess an integrated sugar and ethanol plant with its cogeneration system. The plant was divided into eight sub-systems to evaluate the irreversibility generation in each separately. Data from typical sugarcane factories in Brazil, which produce sugar and ethanol, were used in the process simulation. The analysis has shown that the sub-systems with the highest contribution for the total irreversibility generation of the plant were co-generation, juice extraction and fermentation. Some improvements are proposed, including process thermal integration and the introduction of more efficient equipments for prime mover and steam and electricity generation. The analysis indicated that the total irreversibility could be reduced by 10% should those changes be implemented.

1. Introduction

Sugarcane is one of the most important industries in the Brazilian economy, mainly due to its high efficiency and competitiveness. There are three main types of plants: sugar factories, ethanol distilleries and integrated sugar and ethanol plants generating both products from sugarcane. In the last few years, electricity has become a new product, since sugarcane bagasse may be used as a fuel in the cogeneration system.

In the 2005/2006 harvest season in Brazil 436.8 Mt of sugarcane were processed, producing 17 Mm^3 of ethanol and 26.7 Mt of sugar [1]. More than 300 sugarcane industries operate in the country [2], mainly in the Center-South region, and especially in the São Paulo State.

Currently almost all sugarcane industries in Brazil are self-sufficient in thermal, mechanical and electrical energy during the crushing season. In general, sugar and ethanol production plants can be characterized as having low efficiency in terms of energy usage. Process thermal integration is seldom found, and many plants have low-efficiency cogeneration systems based on a steam cycle with live steam at 22 bar and 300 °C [3].

Irreversibility generation could be considerably reduced with process steam demand reduction and more efficient cogeneration systems. Energy savings in the process can generate bagasse surplus that can be used to increase electricity generation or for the formation of by-products such as ethanol from hydrolysis.

The purpose of this paper is the application of the exergy balance analysis in an integrated sugar, ethanol and electricity process. A base case was analysed in a first configuration, representing the current situation of sugarcane factories in Brazil. Improvements of energy use in the plant were studied in a second step, aiming at the reduction of irreversibility generation.

2. Exergy analysis applied to the sugar and ethanol production

Several authors have formulated definitions of exergy. According to Szargut et al. [4], "exergy is the quantity of work obtained, when a mass is taken from a given state to an equilibrium state with the environmental components, through reversible process considering interactions with environmental elements only". The exergy of a substance or a quantity of energy can be also understood as the measure of its usefulness, quality or potential to cause change.

* Corresponding author. Tel.: +55 21 19 3287 8833; fax: +55 21 19 3289 3722.
E-mail address: adrianov@fem.unicamp.br (A.V. Ensinas).

0360-5442/$ - see front matter © 2008 Elsevier Ltd. All rights reserved.
doi:10.1016/j.energy.2008.06.001

Nomenclature

A	heat transfer area (m^2)
b	solid content (% mass base)
ex	specific exergy (kJ/kg)
Ex	exergy (kW)
C	operating cost (US$/s)
E	equipment purchase cost (US$)
I	irreversibility (kW)
i	annual interest rate (%)
j	equipment useful life (years)
$\dot{m}$	mass flow (kg/s)
P	pressure (bar)
T	temperature (°C)
x	ethanol concentration (% mass base)
Z	investment cost (US$/s)

Greek letters

α	scaling exponent
η	efficiency
ξ	amortization factor (s^{-1})
τ	annual operation hours (h/year)

Subscripts

c	condensates
e	equipment
evap	evaporator
he	heater
ii	second law of thermodynamics
in	inlet
out	outlet
prod	products
r	reference equipment
s	heating steam
tot	total
v	vapour

The exergy can be divided into physical and chemical. Szargut et al. [4] defined the restricted and unrestricted equilibrium associated with each type of exergy.

(a) Restricted equilibrium: The system is taken to a thermal and mechanical equilibrium with the environment; pressure and temperature are the same as those of the environment.
(b) Unrestricted equilibrium: Besides the thermal and mechanical equilibrium, the system also achieves chemical equilibrium with the environment elements.

The physical exergy is the maximum work obtained in a process in which the system goes from the initial state to the restricted equilibrium. Potential and kinetic exergy are also taken into account.

The chemical exergy refers to the maximum work obtained by a system initially in restrict equilibrium with the environment, that reaches the unrestricted equilibrium. Chemical and physical process can occur until the chemical compositions of both the system and the environment are the same.

The exergy of a non-ideal solution or mixture can be calculated taking into account the exergy of the mixture, i.e., the potential work necessary to separate two or more mixed substances at the same temperature and pressure.

Exergy analysis of sugar production is found in some works presented in the literature. Most of them analyses beet sugar factories and the main sources of irreversibility generation in the process.

Guallar [5] has made an exergetic analysis of a beet sugar process with thermal integration. Christodoulou [6] proposed the thermal integration of a sugar beet factory using pinch technology to evaluate the use of six or seven evaporation effects with falling film evaporator and plate heat exchangers. Tekin and Bayramoglu [7] performed an exergy analysis of a sugar beet factory and identified that most irreversibility generation is related to chemical reactions, mainly in the steam-power system and also in the juice clarification unit, especially in limestone calcination, lime staking and lime carbonation. Tekin and Bayramoglu [8] used structural bond coefficients to assess the influence of system operating parameters on beet sugar factory exergy destruction. The increase of steam power plant boiler efficiency and reduction of diffusion and exhaust steam temperature were identified as important measures for exergy destruction minimization.

Bayrak et al. [9] performed an energy and exergy analysis of a sugar beet plant in Turkey, and concluded that most of the irreversibility generation occurs in the juice extraction system. A thermal integration of the process is recommended as an important irreversibility reduction measure.

Other studies were carried out in cane sugar factories, such as the work by Ram and Banerjee [10], who evaluated two evaporation system designs using exergy analysis. Paz and Cárdenas [11] studied improvements on cane sugar factory energy balance using exergy analysis too. A thermal integration of the factory is proposed by using vapour bleeding, juice heating with condensates, sugar boiling with vapour from the second effect, and introduction of falling film evaporators. Ensinas et al. [12] presented a thermoeconomic optimization procedure for the design of evaporation systems and heater networks in sugarcane factories. Thermal integration of the process was obtained with minimum operation and investment costs.

Little information about ethanol and integrated sugar ethanol process is found in literature. Modesto et al. [13] made an exergetic cost analysis for sugarcane ethanol process and identified that the cogeneration system generates more than 50% of the total irreversibility in the plant, followed by the juice extraction system with more than 30% of the total.

In order to perform an exergy analysis of the sugar and ethanol process, sugarcane bagasse, sucrose–water and ethanol–water solutions properties must be obtained. The exergy of sucrose–water solutions can be calculated according to Nebra and Fernández-Parra [14], which presents an analysis of property calculation methods found in the literature for sugar–water solution, as well as a review of the reference system adopted by some authors. Density, solubility, specific heat, enthalpy, entropy, activity and exergy calculation are described.

The exergy of the ethanol–water solution can be calculated by the method presented by Modesto et al. [15] and the bagasse exergy may be estimated by Sosa-Arnao and Nebra [16], using the exergy calculation method for wood proposed by Szargut el al. [4], and adapted for the characteristics of sugarcane bagasse. The methodology proposed by Szargut et al. [4] takes into account correlations obtained from known properties of

organic compounds, which are extended to more complex substances such as wood.

3. Process description and analysis

The sugar and ethanol production process from sugarcane analysed in this paper was divided into the sub-systems described below for separate evaluation and identification of irreversibility generation in each. Fig. 1 shows a sketch of the plant where the sub-systems are indicated.

- *Sub-system I—Juice extraction*: A washing system is used to remove soil, rocks and cane trash delivered with the cane before entering the extraction system. This operation requires a large amount of water, and represents around 25% of the total amount of water required for the plant [17]. After being washed, the cane is prepared using rotating knives and shredders that reduce it to small pieces suitable for the subsequent extraction process. This equipment consumes great part of the total power required by the process, and usually operates with direct drive steam turbines. The juice extraction system separates the fibre from the juice using a milling system that extracts the juice by compression. The separated fibre constitutes the bagasse, which may be delivered to the cogeneration system to be used as fuel, producing the electricity and steam consumed by the process.
- *Sub-system II—Juice treatment*: Some non-sugar impurities are separated by the addition of chemical reactants such as sulphur and lime, among others. The juice must be heated for the purification reactions. After that, it passes through a flash tank, and then enters the clarifier. The precipitate formed in the clarifier is separated from the clarified juice and sent to the filters where part of the juice returns to the process ahead the clarifier and filter cake is rejected. Subsequently, the clarified juice can be directed to the evaporation system. Juice treatments for ethanol and sugar production are similar, except for the sulphur addition step which is used only for sugar production.
- *Sub-system III—Juice evaporation*: Juice is concentrated in a multiple-effect evaporator. Exhaust steam from the cogeneration system is used as a thermal energy source in the first evaporation effect, separating part of the water of the juice and using it as a source of heat for the next evaporation effect. The system works with decreasing pressure due to a vacuum imposed in the last effect, producing the necessary differences of temperature between effects. Vapour bleed can be used to supply heat required by other process sub-systems, such as juice treatment heaters and the sugar boiling system. Part of the juice for ethanol production is concentrated in a five-effect evaporation system to reach the necessary concentration for the fermentation process. The other part of the juice is by-passed to the fermentation process to be mixed with concentrated juice and molasses for the mash preparation.
- *Sub-system IV—Sugar boiling, crystallization and drying*: Syrup is boiled in vacuum pans for crystal formation, and then sent to crystallizers to complete crystal enlargement. After that, sugar crystals are separated from molasses using centrifuges. The sugar dryer consumes exhaust steam to reduce the moisture content of the sugar.
- *Sub-system V—Fermentation*: Integrated sugar and ethanol factories use a mixture of molasses and juice for mash preparation. Part of juice is concentrated to reach the optimum solid content level necessary for the fermentation process. Good quality water is also needed during the mash preparation and for the CO_2 scrubber. The produced fermented liquor is taken to the distillation system to be separated from the water.
- *Sub-system VI—Distillation*: Ethanol produced in the fermentation process is recovered by distillation. Before entering the first distillation column, fermented liquor is heated to the

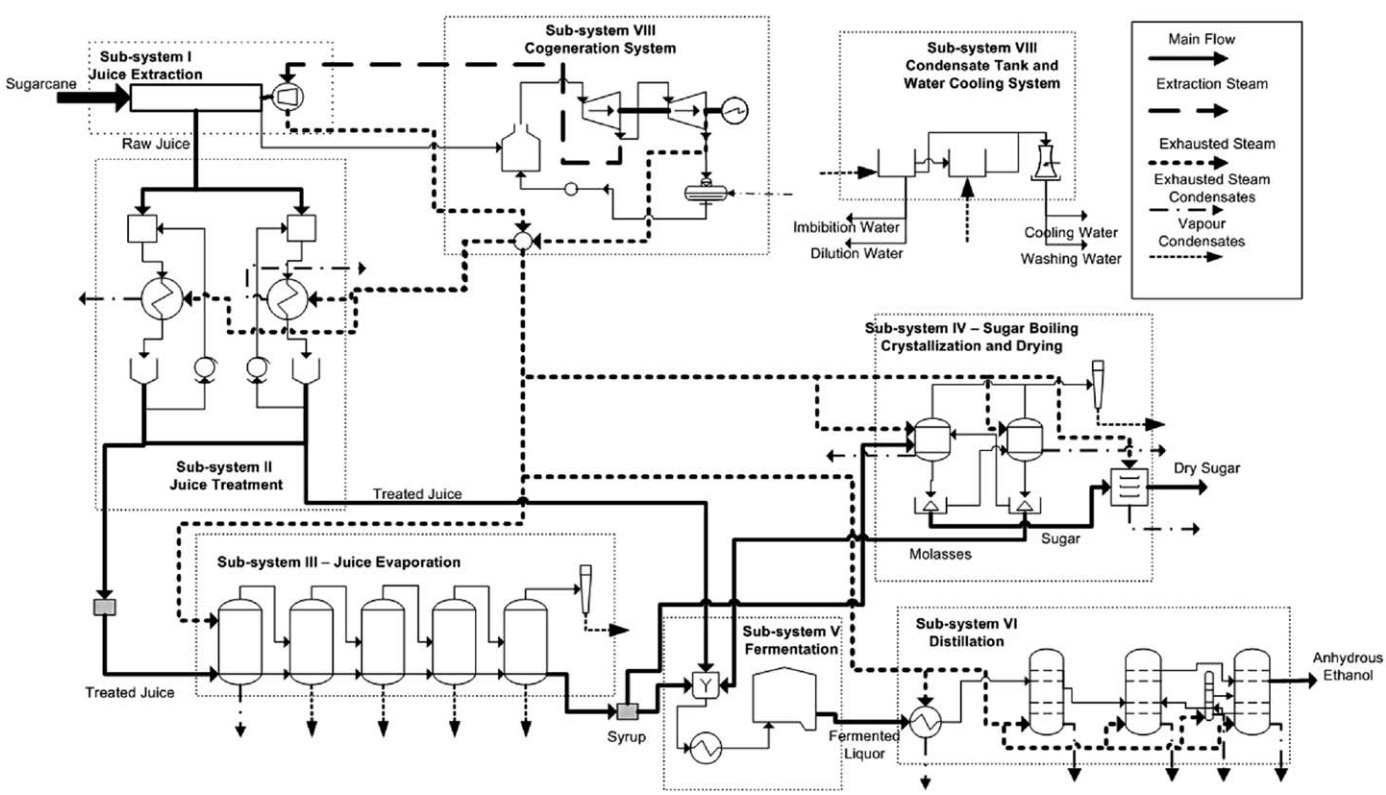

Fig. 1. Sketch of sugar and ethanol process.

adequate temperature for the distillation process. Hydrous ethanol is obtained by stripping and rectification stages. In order to remove the remaining water and obtain anhydrous ethanol, dehydration is required. A large amount of stillage is produced and must be handled as an effluent with high biochemical and chemical oxygen demand.

- *Sub-system VII—Cogeneration system*: A steam cycle cogeneration system consumes the bagasse as fuel to generate steam and electricity for the process. The boiler produces the live steam which is expanded in a back-pressure turbine operating with exhaust steam at 2.5 bar. Steam at 22 bar is used in the milling. Surplus of electricity may be produced and sold to the grid.
- *Sub-system VIII—Condensate tank and water-cooling system*: The condensate tank receives all the condensates generated in the process except the exhaust steam condensate, which returns to the boiler. Two tanks are used, one for storage of hot condensates, such as those originating from the condensation of vapour from the first, second, third and part of the fourth effect of evaporation, supplying hot condensates required for imbibition water of the juice extraction system (Sub-system I) and dilution in Sub-system IV. Another tank supplies the condensates for filter washing at juice treatment, using part of the condensate vapour from the fourth effect of evaporation. The water cooling system is composed of spray ponds that reduce condensate water temperature to be re-circulated in the process as cooling water.

A plant that operates 4000 h and crushes 2,000,000 t of cane during the harvest season was simulated using the EES software [16], where mass, energy and exergy balances were performed. Table 1 presents the parameters adopted for the simulation of the sugar and ethanol process, including also the cogeneration system data.

The juice produced at the extraction system is used for sugar and ethanol production. Molasses obtained as a by-product of the sugar process is also used for ethanol production, mixed with the juice for ethanol in the mash preparation step. The bagasse produced at the extraction system is used to generate steam and electricity at the cogeneration system.

The low heating value of the bagasse was calculated using Hugot's correlation [18]. A bagasse with 50% of moisture content and 1.96% of soluble solids was assumed. The following bagasse composition on the dry base bagasse was assumed: 47.0% of carbon, 6.5% of hydrogen, 44.0% of oxygen and 2.5% of ash [18].

In the exergy analysis performed in this paper, the irreversibility generation and the exergetic efficiency were calculated, respectively, by Eqs. (1) and (2):

$$I = \sum Ex_{\text{in}} - \sum Ex_{\text{out,prod}}, \tag{1}$$

$$\eta_{\text{ii}} = \frac{\sum Ex_{\text{out,prod}}}{\sum Ex_{\text{in}}}. \tag{2}$$

3.1. Base case

A base case representing the typical sugar and ethanol process production in Brazil was simulated. The plant is not thermally integrated, and all heating requirements are met by exhaust steam from the cogeneration system. Some characteristics of the process are presented below:

- mills, shredders and knives operating with direct drive steam turbines in the juice extraction system;
- evaporation systems with five effects;
- sugar boiling system with two-boiling scheme;
- distillation scheme with stripping and rectifying columns at atmospheric pressure;
- dehydration system by azeotropic distillation with cyclohexane.

An exergy balance was calculated for each of the selected subsystems of the plant. Thermodynamic parameters of input and output stream for the base case process configuration are shown in Tables 2–5.

Table 1
Parameters adopted for the process simulation

Parameters	Value
Sugarcane fibre content (%)[a]	14
Bagasse moisture content (%)[a]	50
Sugarcane sucrose content (%)[a]	14
Raw juice purity (%)	86
Filter cake sucrose content (%)[a]	3
Filter cake moisture content (%)[a]	70
Syrup solid content (%)[a]	65
Fermented liquor ethanol concentration (%)[a]	7.6
Anhydrous ethanol concentration (%)[a]	99.3
Process steam pressure (bar)	2.5
Process steam temperature (°C)	127.4
High-pressure steam pressure (bar)	22
High-pressure steam temperature (°C)	300
Mechanical power demand of cane preparation and juice extraction (kWh/t of cane)	16
Electric power demand of sugar and ethanol process (kWh/t of cane)	12
Live steam pressure (bar)	22
Live steam temperature (°C)	300
Direct drive turbine isentropic efficiency	55
Boiler thermal efficiency (%)[b]	78
High-pressure steam turbines isentropic efficiency (%)[c]	72
Medium pressure steam turbines isentropic efficiency (%)[c]	81
Pump isentropic efficiency (%)	80

[a] Mass base.
[b] Ref. [28].
[c] LHV base.

Table 2
Results of base case simulation (Sub-systems I and II)

	$\dot{m}$ (kg/s)	T (°C)	P (bar)	ex (kJ/kg)	Ex (kW)
Sub-system I					
Inputs					
Sugarcane	138.90	25.0	1.01	5297	735,712
Washing water	740.30	30.0	1.01	50	37,089
Imbibitions water	41.00	98.0	1.01	82	3378
High-pressure steam	33.30	300.0	22.00	1071	35,658
Electricity	–	–	–		1250
Ouputs					
Raw juice	141.00	35.0	1.01	2362	333,098
Bagasse	38.90	25.0	1.01	9959	387,413
Low-pressure steam	33.30	155.9	2.50	687	22,860
Sub-system II					
Inputs					
Juice	141.00	35.0	1.01	2362	333,098
Sulphur	0.03	25.0	1.01	19,012	551
Phosphoric acid	0.01	25.0	1.01	1061	6
Lime	0.22	25.0	1.01	1965	428
Filter washing water	4.37	82.0	1.01	70	307
Exhaust steam	19.60	127.4	2.50	668	13,101
Electricity	–	–	–	–	1000
Outputs					
Treated juice	139.90	97.0	1.01	2396	335,172
Condensate to the boiler	19.60	127.4	2.50	111	2170

Table 3
Results of base case simulation (Sub-systems III and IV)

	$\dot{m}$ (kg/s)	T (°C)	P (bar)	ex (kJ/kg)	Ex (kW)
Sub-system III					
Inputs					
Treated juice	91.40	97.0	1.01	2396	218,976
Exhaust steam	16.30	127.4	2.50	668	10,895
Water for vacuum system	425.70	30.0	1.01	50	21,328
Electricity	–	–	–	–	750
Outputs					
Syrup for sugar process	14.28	58.3	0.16	11,422	163,075
Syrup for ethanol process	4.37	58.3	0.16	11,422	49,964
Condensate to the boiler	16.30	127.4	2.50	111	1804
Condensate from vapour of 1st effect	13.10	115.0	1.69	98	1280
Condensate from vapour of 2nd effect	13.70	109.3	1.40	92	1263
Condensate from vapour of 3rd effect	14.40	102.2	1.10	86	1236
Condensate from vapour of 4th effect	15.20	90.5	0.71	76	1159
Condensate from the vacuum system	442.10	52.0	1.01	55	24,227
Sub-system IV					
Inputs					
Syrup for sugar production	14.28	58.3	0.16	11,422	163,075
Exhaust steam	10.59	127.4	2.50	668	7078
Condensates for centrifuges and dilution	2.80	98.0	1.69	83	231
Water for vacuum system	181.30	30.0	1.01	50	9083
Electricity	–	–	–	–	2250
Outputs					
Sugar	7.03	25.0	1.01	17,551	123,301
Molasses	3.02	57.0	1.01	12,824	38,722
Condensate to the boiler	10.59	127.4	2.50	111	1172
Condensate from the vacuum system	188.30	52.0	1.01	55	10,319

Table 4
Results of base case simulation (Sub-systems V and VI)

	$\dot{m}$ (kg/s)	T (°C)	P (bar)	ex (kJ/kg)	Ex (kW)
Sub-system V					
Inputs					
Syrup for sugar ethanol production	4.37	58.3	0.16	11,422	49,964
Treated juice	48.50	97.0	1.01	2396	116,196
Molasses	3.00	57.0	1.01	12,824	38,471
Water for scrubber	3.70	25.0	1.01	50	185
Water to cooling system	416.70	30.0	1.01	50	20,877
Electricity					375
Outputs					
Fermented liquor	59.60	30.0	1.01	2375	141,526
Water from cooling system	416.70	52.0	1.01	55	22,835
Sub-system VI					
Inputs					
Fermented liquor	59.56	30.0	1.01	2375	141,442
Exhaust steam	28.55	127.4	2.50	668	19,083
Water for the cooling system	555.60	30.0	1.01	50	27,836
Electricity	–	–	–	–	375
Outputs					
Anhydrous ethanol	4.54	25.0	1.01	29,550	134,068
Water from the cooling system	555.60	52.0	1.01	55	30,447
Condensate to the boiler	28.55	127.4	2.50	111	3160

The following assumptions were made for the exergy analysis performed in this paper:

- all sub-systems are considered as an open steady-state thermodynamic system;
- the reference environment proposed by Szargut et al. [4] was adopted with a reference temperature of 25 °C and a pressure of 1.013 bar;
- kinetic and potential energies were neglected;
- sugarcane exergy was assumed as the sum of its bagasse and juice content exergy;
- filter cake was considered useless.

3.2. Improved case

The improved case was simulated based on results and recommendations of other works found in the literature as Rein [19] and Upadhiaya [20] which presents some opportunities to increase bagasse and/or electricity surplus in the cogeneration system. These improvements include electrification of the mills, reduction of process steam requirements and increase of cogeneration system efficiency.

The modifications implemented in the improved case are described below.

3.2.1. Electrification of mills

One of the measures adopted was the replacement of low-efficiency steam turbines by electric engines as prime movers for mills, shredders and knives. Reduction of the extraction steam (22 bar) requirements resulting from this change can contribute for a greater surplus of electricity generation in the cogeneration system avoiding the use of high-pressure steam in small, low-efficiency turbines. Electric engines with 96% efficiency were adopted.

3.2.2. Process steam demand reduction

Some measures were implemented in order to reduce process exhaust steam demand, and consequently decrease irreversibility generation. The measures below were adopted for this purpose:

- Increase the syrup solid content from 65% to 72%, which reduces steam requirements for the sugar boiling system and

Table 5
Results of base case simulation (Sub-systems VII and VIII)

	$\dot{m}$ (kg/s)	T (°C)	P (bar)	ex (kJ/kg)	Ex (kW)
Sub-system VII					
Inputs					
Bagasse	38.89	25.0	1.01	9959	387,302
Make up water	3.80	25.0	2.50	50	190
Return of exhausted steam from mills	33.30	155.9	2.50	687	22,860
Return of condensate from the process	75.00	127.4	2.50	111	8318
Outputs					
Electricity to the process	–	–	–	–	6000
Surplus of electricity	–	–	–	–	8222
High-pressure steam	33.30	300.0	22.00	1071	35,658
Exhausted steam	75.00	127.4	2.50	670	50,213
Sub-system VIII					
Inputs					
Condensate from fermentation cooling system	416.70	52.0	1.01	55	22,835
Condensate from distillation cooling system	555.60	52.0	1.01	55	30,447
Condensate from evaporation vacuum system	442.10	52.0	1.01	55	24,227
Condensate from sugar boiling vacuum system	188.30	52.0	1.01	55	10,319
Condensate from vapour of 1st effect	13.10	115.0	1.69	98	1280
Condensate from vapour of 2nd effect	13.70	109.3	1.40	92	1263
Condensate from vapour of 3rd effect	14.40	102.2	1.10	86	1236
Condensate from vapour of 4th effect	15.20	90.5	0.71	76	1159
Make up water	800.40	25.0	1.01	50	40,020
Outputs					
Filter washing water	4.47	82.0	1.01	70	309
Imbibitions water	41.00	98.0	1.01	82	3378
Water for centrifuges and dilution	2.80	98.0	1.01	82	231
Water for cane washing	740.30	30.0	1.01	50	37,089
Water for evaporation vacuum system	425.70	30.0	1.01	50	21,328
Water for sugar boiling vacuum system	181.30	30.0	1.01	50	9083
Water for fermentation cooling system	416.70	30.0	1.01	50	20,877
Water for distillation cooling system	555.60	30.0	1.01	50	27,836

increases the amount of vapour available to heat other parts of the process.

- Sugar pan heat is supplied by vapour generated in 3rd evaporation effect.
- Heating the treated juice with vapour bleed to increase its temperature and bring it closer to the boiling point of the first effect of evaporation. This can reduce the requirements of exhaust steam in the evaporation system.
- Replacement of conventional distillation system by a dual-pressure distillation system for hydrated ethanol production. The re-boiler of the stripping column, operating under vacuum, is used as the condenser of the rectifying column, operating at atmospheric pressure. Moreover, molecular sieves reducing the steam consumption for the dehydration step replaced the azeotropic distillation system with cyclo-hexane. The specific steam consumption of these systems given by Rein [19] and Seemann [21] is 2.5 kg of steam/l ethanol for the stripping and rectifying columns, and 0.05 kg of steam/l ethanol for the dehydration step (considering steam saturated at 2.5 bar).

A new design for both the evaporation system and the heater network was adopted, using vapour bleed as heating source for other parts of the process, thus reducing the exergy destruction at the condensation system at the last effect of evaporation.

The thermoeconomic optimization procedure presented by Ensinas et al. [12] was used for equipment design. The program was implemented with EES software [22] aiming at the best distribution for the vapour bleed from the evaporation system with a minimum cost of investment and operation in evaporators and heaters.

The objective functions for the evaporation system and heater network are defined by Eqs. (3) and (4), respectively. Eq. (3) minimizes the total cost of the evaporation system including investments on heat transfer area. Operation costs include heating steam and the reduction obtained with vapour bleed and useful condensates. The objective function for heater network is defined by Eq. (4) and includes the investment cost on heat transfer area and the heating stream. The useful condensates were considered as products, reducing the total cost of each heater:

$$MinC_{\text{evap}} = \sum_{\text{e}} Z_{\text{e}} + \sum_{\text{s}} C_{\text{s}} - \sum_{\text{v}} C_{\text{v}} - \sum_{\text{c}} C_{\text{c}}, \tag{3}$$

$$MinC_{\text{he}} = \sum_{\text{e}} Z_{\text{e}} + \sum_{\text{s}} C_{\text{s}} - \sum_{\text{c}} C_{\text{c}}. \tag{4}$$

The total cost of the plant is defined by Eq. (5), which considers the sum of minimum cost of all sub-systems obtained after the optimization procedure:

$$C_{\text{tot}} = \sum_{\text{n}} C_{\text{n}}. \tag{5}$$

Steam and condensate streams costs were calculated using the procedure described in Ensinas et al. [12]. The theory of exergetic cost [23] was used, assuming that bagasse and sugarcane have the same unit exergetic cost. A balance of cost was performed, taking the cogeneration system boiler as control volume. The live steam unit exergetic cost was calculated, assuming that exhaust steam, vapour bleed and condensates have the same unit exergetic cost. The values obtained for sugarcane and heating stream unit exergetic costs are presented in Table 6. Data used for cost estimates are shown in Table 7.

The investment cost of evaporators and heaters was calculated using Eqs. (6)–(8). Scaling exponent is used to correct the reference equipment purchase cost for the optimized heat transfer area (Eq. (7)) [24]. Data used in the calculation are

Table 6
Unit exergetic costs determined for the optimization procedure

	Unit exergetic cost (10^{-6} US$/kJ)
Sugar cane	2.6970
Live steam	10.2316

Table 7
Data used for determination of steam cost

Parameter	Value
Boiler capital cost (10^6 US$)[a]	12
Sugarcane production cost (US$/t)[b]	14
Available bagasse (kg/t cane)[c]	280
Boiler efficiency (%)[d]	85

[a] Cost of boiler with following characteristics: 63 bar, 480 °C, 200 t steam/h including costs of installation and instrumentation [29].
[b] Cost of sugar cane ready to be processed at the State of Sao Paulo, Brazil, in 2006 [30].
[c] Wet base (50% of moisture).
[d] LHV base.

Table 8
Data used for determination of equipment cost

Parameter	Value
Evaporator purchase cost (10^3 US$)[a]	476
Vapour–liquid heat exchangers purchase cost (10^3 US$)[b]	43
Liquid–liquid heat exchangers purchase cost (10^3 US$)[c]	62
Evaporator scaling factor[d]	0.7
Heater scaling factor[d]	0.5
Annual interest rate (%)	10
Equipment useful life (years)	15
Plant operation hours per year	4000

[a] Cost of installed evaporator Robert type with 4000 m^2 of area [30].
[b] Cost of installed carbon steel shell and tube juice heater with 300 m^2 of area [30].
[c] Cost of installed stainless steel shell and tube juice heater with 300 m^2 of area [30].
[d] Ref. [31].

shown in Table 8:

$$Z_e = E_e \xi, \tag{6}$$

where

$$E = E_r \left(\frac{A}{A_r}\right)^{\alpha}, \tag{7}$$

$$\xi = \frac{(i(1+i)^j)/((1+i)^j - 1)}{3600\tau}. \tag{8}$$

A maximum heat transfer area was set for evaporators and heaters to represent a realistic design of these pieces of equipment. The maximum size of an evaporator was set to 5000 m^2, and for heaters the limit was 700 m^2.

The evaporation system model was composed of a Robert type five-effect evaporator, which operates with a vacuum at the last effect, producing the temperature difference between effects. The heat demand of the sugar boiling system was estimated as 74.4 kWh/t cane, and it was assumed that it is supplied by the vapour produced in the third effect of evaporation. Some restrictions are imposed for the optimization:

- Maximum temperature of 115 °C for juice boiling at the first effect to avoid juice sucrose loss and coloration [25].
- Minimal pressure of 0.16 bar at the last effect [18].

Table 9
Streams of the heaters network

Streams	$\dot{m}$ (kg/s)	B (%)	x (%)	T_{in} (°C)	T_{out} (°C)
A Raw juice heating for sugar	77.7	13.4	–	35.0	105.0
B Raw juice heating for ethanol	77.7	13.4	–	35.0	105.0
C Treated juice heating before evaporation	90.3	13.4	–	97.0	112.0
D Fermented liquor heating	60.2	–	7.6	30.0	90.0

Table 10
Description of heater network stages for each stream

Stream	Heating step	T_{in} (°C)	T_{out} (°C)	Hot streams	T_{in} (°C)	T_{out} (°C)
Raw juice for sugar	1	35.0	78.5	Condensate	105.0	38.4
	2	78.5	85.4	Vapour 4th	94.4	90.9
	3	85.4	97.3	Vapour 3rd	103.9	102.3
	4	97.3	105.0	Vapour 2nd	110.2	109.6
Raw juice for ethanol	1	35.0	79.9	Stillage	100.0	40.5
	2	79.9	85.5	Vapour 4th	94.4	90.9
	3	85.5	97.1	Vapour 3rd	103.9	102.3
	4	97.1	105.0	Vapour 2nd	110.2	109.6
Treated juice	1	97.0	104.6	Vapour 2nd	110.2	109.6
	2	104.6	112.0	Vapour 1st	115.4	115.0
Fermented liquor	1	30.0	77.5	Mash	95.1	36.9
	2	77.5	80.0	Vapour 4th	94.4	90.9
	3	80.0	90.0	Vapour 3rd	103.9	102.3

Streams presented in Table 9 were heated using the new heater network. The purities of streams A, B and C were assumed constant at 86%.

Three hot liquid streams listed below were identified as heating sources, and were used as a first heating step for streams A, B and D, respectively.

- Condensate at 105 °C generated in the evaporation system. This stream is cooled before its use as imbibition water in mills [19], and therefore part of its heat could be recovered.
- Stillage at 100 °C generated at the distillation system must be cooled to be disposed, and it is possible to recover its energy.
- Mash at 95 °C must be cooled to reach the optimal temperature of the fermentation process.

The vapour produced by the evaporation system was used to complete the heating requirements of stream A, B, C and D. Table 10 shows the final results of the heater network designed with the optimization procedure.

The new heater network was designed together with the evaporation system to allow the better utilization of the vapour generated at the juice evaporation process, where important possibilities of thermal process integration are found. Fig. 2 shows a sketch of the new heaters network proposed and the integration with the evaporation system.

3.2.3. Increase of cogeneration system efficiency

The cogeneration system may be improved in order to produce more electricity surplus, which can be sold to the grid. Live steam generation parameters at higher pressure and temperature levels were adopted. New cogeneration systems in the Brazilian sugarcane industry are being constructed with live steam at 90 bar and 520 °C, with 85% of thermal efficiency (LHV base) [26], and therefore these parameters were chosen. Condensation–extraction

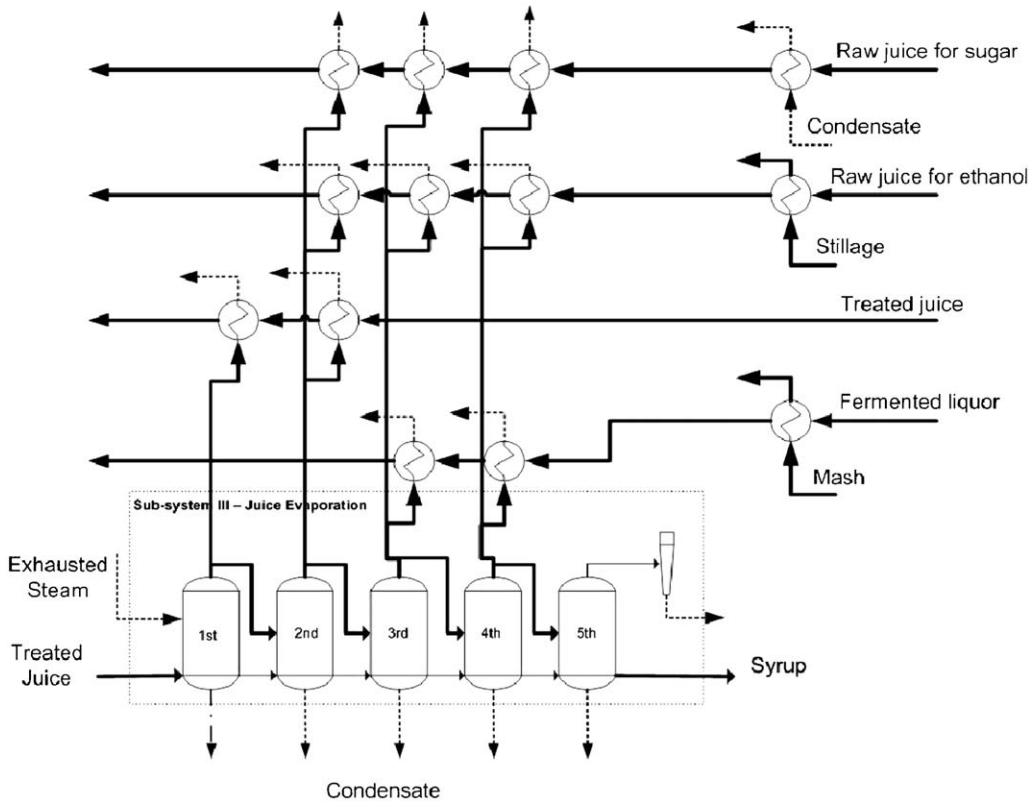

Fig. 2. Sketch of heat network designed for thermal integration of the process.

steam turbines, instead of back-pressure turbines, were also implemented. This allows the consumption of all the bagasse produced, increasing electricity generation.

Different configurations for the cogeneration systems of sugar and ethanol plants were studied by Ensinas et al. [27]. Alternatives of steam-based cycle and combined cycle with bagasse gasification were analysed for the same process steam demand levels obtained in the present paper.

4. Results and discussion

Exergetic efficiency in each sub-system for base and improved cases were calculated, and are presented in Table 1, which also shows the contribution of each sub-system for the total irreversibility generation of the plant.

The exergetic analysis has shown that the cogeneration system is responsible for 63% of the total irreversibility generated in the base case, with an exergetic efficiency of 18%. Irreversibility of the bagasse combustion process is the main cause of this result. Sub-system I, consisting of the juice extraction system, generates 14% of the total irreversibility, followed by the fermentation process, Sub-system V, with 12%. Sub-system I irreversibility generation is due to the sugar losses in the extraction process, and to the high power consumption attended by low efficient direct drive steam turbines. Sub-system V also generates a large amount of irreversibility because of inefficiencies in the fermentation process. The exergetic efficiency calculated for the whole plant in the base case, which represents a typical sugar and ethanol plant in Brazil, was 35%.

After implementing the proposed improvements a reduction of the irreversibility generation for each sub-system was verified (Fig. 3).

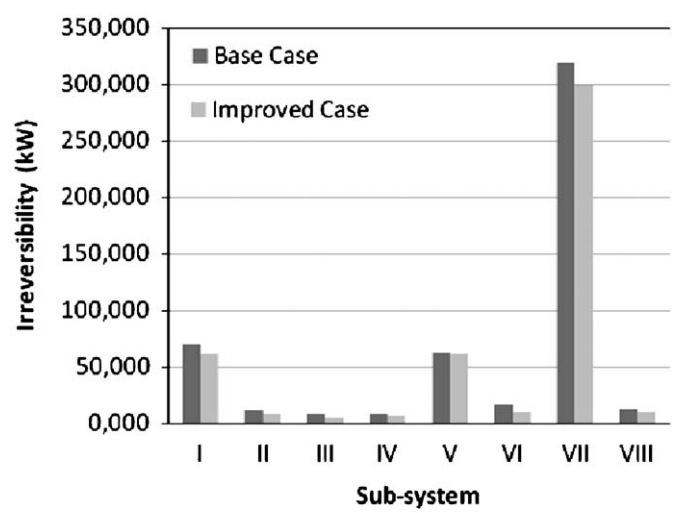

Fig. 3. Irreversibility generated in each sub-system (base and improved cases).

Comparison of the improved case to the base case revealed that the improvements adopted for the exergy destruction minimization were effective. Table 11 shows that the exergetic efficiency of the cogeneration system (Sub-system VII) has increased to 23%. The efficiency of the plant has also increased to 41%, 6% higher than the base case.

Table 12 shows the reduction of irreversibility in each sub-system. Around 10% of the total irreversibility could be reduced, specially through improvements in the cogeneration systems, which amounted to 4%. Higher boiler efficiency and electricity

Table 11
Results of the exergy analysis (base and improved cases)

Sub-system	η_{ii} (%)		Fraction of the total irreversibility generation of the plant (%)	
	Base	Improved	Base	Improved
I	91	92	14	13
II	97	98	2	2
III	97	98	2	1
IV	95	96	2	1
V	70	70	12	13
VI	90	93	3	2
VII	18	23	63	65
VIII	85	86	2	2
Total	35	41	100	100

Table 12
Irreversibility reduction between base and improved case

Sub-system	Irreversibility reduction (%)
I	2
II	1
III	1
IV	0
V	0
VI	1
VII	4
VIII	1
Total	10

Table 13
Exhausted steam demand and surplus of electricity for base and improved cases

Sub-system	Exhausted steam demand (kg steam/t of cane)	Surplus of electricity (kWh/t of cane)
Base case	540	16.4
Improved case	278	105.1

generation with extraction–condensation turbine and process steam demand reduction contributed to this result.

The extraction system also exhibited a substantial reduction by the use of electric engines rather than direct drive steam turbines as the prime mover. The process steam demand and the surplus of electricity generation of both cases are shown in Table 13.

The exergetic analysis presented in this paper proved to be very useful for the identification of irreversibility generation in sugar and ethanol processes. Improvements in the cogeneration system were found to be the most important to reduce exergy destruction. Boilers with higher thermal efficiencies together with the process steam demand reduction can contribute significantly for this purpose.

The proposed modification in the plant promoted a substantial reduction in the irreversibility generation, contributing for the higher surplus of electricity generation. This surplus increase was significant, making electricity an important product for the sugar and ethanol plant. This analysis also showed that the process steam requirement can be reduced to levels below 280 kg of steam/t of cane. This reduction can be important in the near future for the use of more efficient cogeneration systems such as combined cycles with bagasse gasification (BIG-CC), which has limitations as far as steam generation and process steam reduction at this level are concerned.

References

[1] CONAB—Companhia Nacional de Abastecimento. Ministério da Agricultura Pecuária e Abastecimento. Sugarcane harvest 2005/2006 [Cana de Açúcar Safra 2005/2006]. December 2005. See also: 〈http://www.conab.gov.br〉 [in Portuguese].
[2] UNICA—União da Agroindústria Canavieira de São Paulo, 2006. See also: 〈http://www.unica.com.br〉.
[3] Macedo IC, Leal MR, Hassuani SJ. Sugar cane residues for power generation in the sugar/ethanol mills in Brazil. Energy Sust Dev 2001;5(1):77–82.
[4] Szargut J, Morris DR, Steward FR. Exergy analysis of thermal chemical and metallurgical processes. New York: Hemisphere Publishing Corporation; 1988.
[5] Guallar PJ. Exergetic analysis and process thermal integration in the sugar industry [Analisis exergetico e integracion termica de processos en la industria azucarera]. Doctoral thesis, University of Zaragoza, Zaragoza, Spain, 1987 [in Spanish].
[6] Christodoulou P. The pinch technology and the energy reduction in the beet sugar process. Zuckerind 1992;117(3):169–75.
[7] Tekin T, Bayramoglu M. Exergy analysis of the sugar production process form sugar beets. Int J Energy Res 1998;22:591–601.
[8] Tekin T, Bayramoglu M. Exergy and structural analysis of raw juice production and steam-power units of a sugar production plant. Energy 2001;26:287–97.
[9] Bayrak M, Midilli A, Nurveren K. Energy and exergy analyses of sugar production stages. Int J Energy Res 2003;27:989–1001.
[10] Ram JR, Benerjee R. Energy and cogeneration targeting for a sugar factory. Appl Thermal Eng 2003;23:1567–75.
[11] Paz D, Cárdenas J. Análisis exergético de um sistema de calentamiento-evaporación-cocimiento. Int Sugar J 1997;99(1182S).
[12] Ensinas AV, Nebra SA, Lozano MA, Serra LM. Design of evaporation systems and heaters networks in sugar cane factories using a thermoeconomic optimization procedure. Int J Thermodyn 2007;10(3):97–105.
[13] Modesto M, Nebra SA, Zemp RJ. Exergetic cost based analysis to improve the ethanol production from sugar cane biomass. In: Proceedings of ESDA06: 8th biennial conference on engineering systems design and analysis, Turin, Italy, 4–7 July 2006.
[14] Nebra SA, Fernandez-Parra MI. The exergy of sucrose–water solutions: proposal of a calculation method. In: Proceeding of ECOS 2005—18th international conference on efficiency, cost, optimization, simulation and environmental impact of energy systems, vol. 1, Trondheim, Norway, 20–22 June 2005. p. 385–92.
[15] Modesto M, Nebra S, Zemp RJ. A proposal to calculate the exergy of non ideal mixtures ethanol–water using properties of excess. In: Proceedings of 14th European biomass conference and exhibition. Biomass for energy, industry and climate protection, Paris, France, 17–21 October 2005. p. 124–7.
[16] Sosa-Arnao JH, Nebra SA. Exergy of sugar cane bagasse. In: Proceedings of 14th European biomass conference and exhibition. Biomass for energy, industry and climate protection, Paris, France, 17–21 October 2005.
[17] Macedo IC. The sugarcane energy [A energia da cana-de-açúcar]. São Paulo: Berlendis & Vertecchia: UNICA—União da Agroindústria Canavieira do Estado de São Paulo, 2005 [in Portuguese].
[18] Hugot E. Handbook of cane sugar engineering. 3rd ed. Amsterdam: Elsevier Publishing Company; 1986.
[19] Rein P. Cane sugar engineering. Berlin: Verlag Dr. Albert Bartens KG; 2007.
[20] Upadhiaya UC. Cogeneration of steam and electric power. Int Sugar J 1992; 94(1117).
[21] Seemann F. Ethanol production and use. Section 5: Energy reduction in distillation. In: ISSCT co-products workshop, Piracicaba, Brazil, 14–18 July 2003.
[22] EES Engineering Equation Solver. F-Chart, 2007.
[23] Lozano MA, Valero A. Theory of the exergetic cost. Energy 1993;18(9):939–60.
[24] Bejan A, Tsatsaronis G, Moran M. Thermal design optimisation. New York: Wiley; 1996.
[25] Baloh T. Energy manual for sugar factories. 2nd Ed. Berlin: Verlag Dr. Albert Bartens; 1995.
[26] DEDINI S/A Industrias de Base 2006. See also: 〈http://www.dedini.com.br〉.
[27] Ensinas AV, Nebra SA, Lozano MA, Serra LM. Analysis of process steam demand reduction and electricity generation in sugar and ethanol production from sugarcane. Energy Convers Manage 2007;48:2978–87.
[28] NG Metalurgica. Piracicaba-SP, Brazil. Personal communication. December 2006.
[29] DEDINI S/A Industrias de Base. Piracicaba-SP, Brazil. Personal communication. July 2005.
[30] Usina Santa Isabel-Novo Horizonte-SP, Brazil. Personal communication. January 2006.
[31] Chauvel A, Fournier G, Raimbaut C. Handbook of process economy evaluation (Manuel d'evaluation économique des procédés)—Nouvelle Édition Revee et Augmentée. Paris: Editions Technip; 2001 [in French].