Energy 34 (2009) 575–586

Contents lists available at ScienceDirect

Energy

journal homepage: www.elsevier.com/locate/energy

Polygeneration and efficient use of natural resources

Luis M. Serra [a,*], Miguel-Angel Lozano [a], Jose Ramos [a], Adriano V. Ensinas [b], Silvia A. Nebra [b]

[a] GITSE-I3A, Department of Mechanical Engineering, University of Zaragoza, CPS de Ingenieros, María de Luna, 3, 5018 Zaragoza, Spain
[b] Energy Department, State University of Campinas, Faculdade de Engenharia Mecânica, Cidade Universitária Zeferino Vaz-Barão Geraldo, Campinas, Brazil

ARTICLE INFO

Article history:
Received 18 November 2007
Available online 2 October 2008

Keywords:
Polygeneration
Energy efficiency
Process integration

ABSTRACT

The consumption of natural resources has been increasing continuously during recent decades, due to the growing demand caused by both the economic and the demographic rise of global population. Environmental overloads that endanger the survival of our civilization and the sustainability of current life support systems are caused by the increased consumption of natural resources—particularly water and energy—which are essential for life and for the socio-economic development of societies. While not yet well utilized, process integration and polygeneration are promising tools which reach the double objective of increasing the efficiency of natural resources, and also minimizing the environmental impact. This paper discusses the concepts of polygeneration and energy integration and various examples of polygeneration systems: (i) sugar and energy production in a sugarcane factory; (ii) district heating and cooling with natural gas cogeneration engines and (iii) combined production of water and energy. It is clearly evident that polygeneration systems which include appropriate process integration significantly increase the efficient use of natural resources.

1. Introduction

World population at the turn of the century, was approximately 6 billion people. Nearly 3 billion people were living on less than 2$/day and less than 2 billion people had overcome the poverty threshold. In the General Assembly of the United Nations (UN) held in 2000, the *Millenium Declaration* [1] was approved, in which the *Millenium Development Goals* were established. The main objective of these goals was to reduce the gap significantly between developed and developing countries, in terms of alleviation of poverty, hunger, safe water supply and sanitation, education, health, etc.

During the last decades, due to the demographic and economic exponential growth, a significant increase has been recorded in:

- consumption of natural resources, particularly non-renewable resources;
- demand for minerals, water and energy services;
- pollution and environmental degradation;
- gap between developed and developing countries.

To illustrate the possible consequences of such exponential growth, the gross domestic product (GDP) in China and India—almost 40% of the world population—is experiencing a continuous growth of about 9% and 7%, respectively. This means that, on average, their economies double every 10 years; and as a consequence, their consumption level increases very rapidly. Presently, China's consumption in the five basic food, energy and industrial commodities—grain and meat, oil and coal and steel—has exceeded that of the United States in all but oil [2]. If the Chinese economy continues to grow at 8% per year, by 2031 the income per person will equal that of the United States in 2004 [2]. To show what this represents, let us assume that the consumption patterns of China's population in 2031 will be similar to those of Americans in 2004, resulting in the following consumption levels [2]: grain, two-thirds of the present world grain harvest; paper, two times the present world paper production; cars, 1.1 billion vehicles—the current world fleet is about 800 million; oil, 99 million barrels of oil a day—current daily oil production in the world is approximately 84 million barrels.

The above values were only to illustrate what could happen if nothing changes, neither technologically nor culturally. As a consequence of the exponential growth, the present ecological footprint of humankind is currently around 1.2 planets, experiencing an increase in over 2.5 times during the last 50 years [3]—in 1960, it was only 0.5 planets. This situation clearly requires new approaches to allow the more than 4.5 billion people to overcome the poverty threshold, without endangering the global sustainability and survival of the present societies.

Obviously, with the present patterns of development and use of natural resources, there are not sufficient resources to reach such levels of consumption for the entire world population. This challenge demands not only new patterns of development but also a dramatic increase in the efficient use of natural resources.

* Corresponding author. Fax: +34 976 762616.
E-mail address: serra@unizar.es (L.M. Serra).

0360-5442/$ - see front matter © 2008 Elsevier Ltd. All rights reserved.
doi:10.1016/j.energy.2008.08.013

Nomenclature

Abs	absorption refrigerator
ACUc	thermal energy storage (heat)
ACUf	thermal energy storage (cold)
Aux	auxiliary boiler
DACS	domestic hot water demand
CARc	thermal energy stored (heat)
CARf	thermal energy stored (cold)
DACS	domestic hot water demand
DESc	thermal energy discharged (heat)
DESf	thermal energy discharged (cold)
DF	cooling demand
DQ	heating demand
Ec	purchased electricity
ES	energy storage
Ev	sold electricity
Faux	auxiliary boiler fuel
Fm	cogeneration module fuel
HP	high pressure
LP	low pressure
MACI	cogeneration module (internal combustion engine)
MED	multieffect distillation
MF	vapor compression refrigerator
MSF	multistage flash desalination
PERc	thermal energy lost (heat)
PERf	thermal energy lost (cold)
Qabs	heat to absorption refrigerator
Qabsd	heat loss in absorption refrigerator
Qaux	heat from auxiliary boiler
Qc	cogenerated heat from jacket
Qca	used cogenerated heat from jacket
Qcd	lost cogenerated heat from jacket
Qg	cogenerated heat from gases
Qga	used cogenerated heat from gases
Qgd	lost cogenerated heat from gases
Qmfd	heat loss in absorption refrigerator
Qo	cogenerated heat from lube oil
Qoa	used cogenerated heat from lube oil
Qod	lost cogenerated heat from lube oil
Qref	heat dissipated in cooling tower
Rabs	cooling from absorption refrigerator
Rmf	cooling from compression refrigerator
RO	reverse osmosis
TR	cooling tower
Wm	cogenerated electricity
Wmf	work to compression refrigerator

While energy is an essential factor required for the development of societies and countries, it also represents a problem for sustainable development. Energy is required to develop any activity in any field (education, health, agriculture, food production, water supply, industry and so on). Global energy consumption has been constantly rising during the last three decades and this trend will persist in the future [4,5]. The present utilization of energy represents one of the most important sources of environmental pollution and greenhouse gas emissions [3]. Also in 2004, the total global primary energy supply was 11,059 Mt, of which 80.3% came from fossil fuels [4]. In 2004, due to the consumption of fossil fuels, global CO_2 emissions were 26,583 Mt [4], which represents approximately 50% of the present ecological footprint of humankind [3]. This current energy situation and subsequent environmental problems require the utilization of advanced, innovative and efficient primary energy technologies [5,6]. However, not only energy resources are experiencing an accelerated consumption, as the demand and consumption of fresh water, minerals and many other natural resources are also increasing [2,3].

In this respect, polygeneration technologies, more developed for chemical [7] and energy processes [8], and clearly underutilized, allow the reduction of the consumption of energy and natural resources, providing:

- maximum usage of energy and natural resources as a consequence of increasing efficiency of energy and materials;
- reduction of unit cost of final products;
- reduction of environmental burden.

As much as possible, planning and designing involving sustainable development criteria should account for these factors simultaneously. Therefore, in agreement with Favrat et al. [9], the design of sustainable energy systems requires appropriate process integration based on:

- holistic approach;
- modern information techniques;
- application of thermodynamics.

Substantial economic and energetic savings can be accomplished using a properly integrated energy system when compared with conventional energy systems [10] providing the same quality of energy services. Furthermore, the more integrated the energy process is, the higher the energy savings are when compared to conventional energy systems [6,11].

The main objective of this paper is to show clearly the great potential of polygeneration systems and process integration, in augmenting energy efficiency and at the same time minimizing the consumption of natural resources without decreasing the quality of the services provided. In order to highlight the substantial potential savings, in terms of natural resources consumption, as well as the wide range of applications, the analysis of three very different systems is presented:

1. a sugarcane factory;
2. a district heating and cooling (DHC) system;
3. several configurations of combined production of water and energy.

2. Polygeneration and energy process integration

Polygeneration can be defined as the combined production of two or more energy services and/or manufactured products, seeking to take advantage of the maximum thermodynamic potential (maximum thermodynamic efficiency) of the consumed resources. Fig. 1a shows a generic diagram of polygeneration systems, which are always multi-product systems, at times using several resources and minimizing the generation of residues. Some examples are cogeneration systems (Fig. 1b), trigeneration systems (Fig. 1c), dual purpose power and desalination plants (Fig. 1d) and sugarcane factories (Fig. 1e).

Energy process integration encompass techniques based on the thermodynamic and economic analysis of individual components as well as the system as a whole, oriented to design and improve production systems, maximizing the efficiency of consumed resources. Their fundamentals are found in exergy analysis

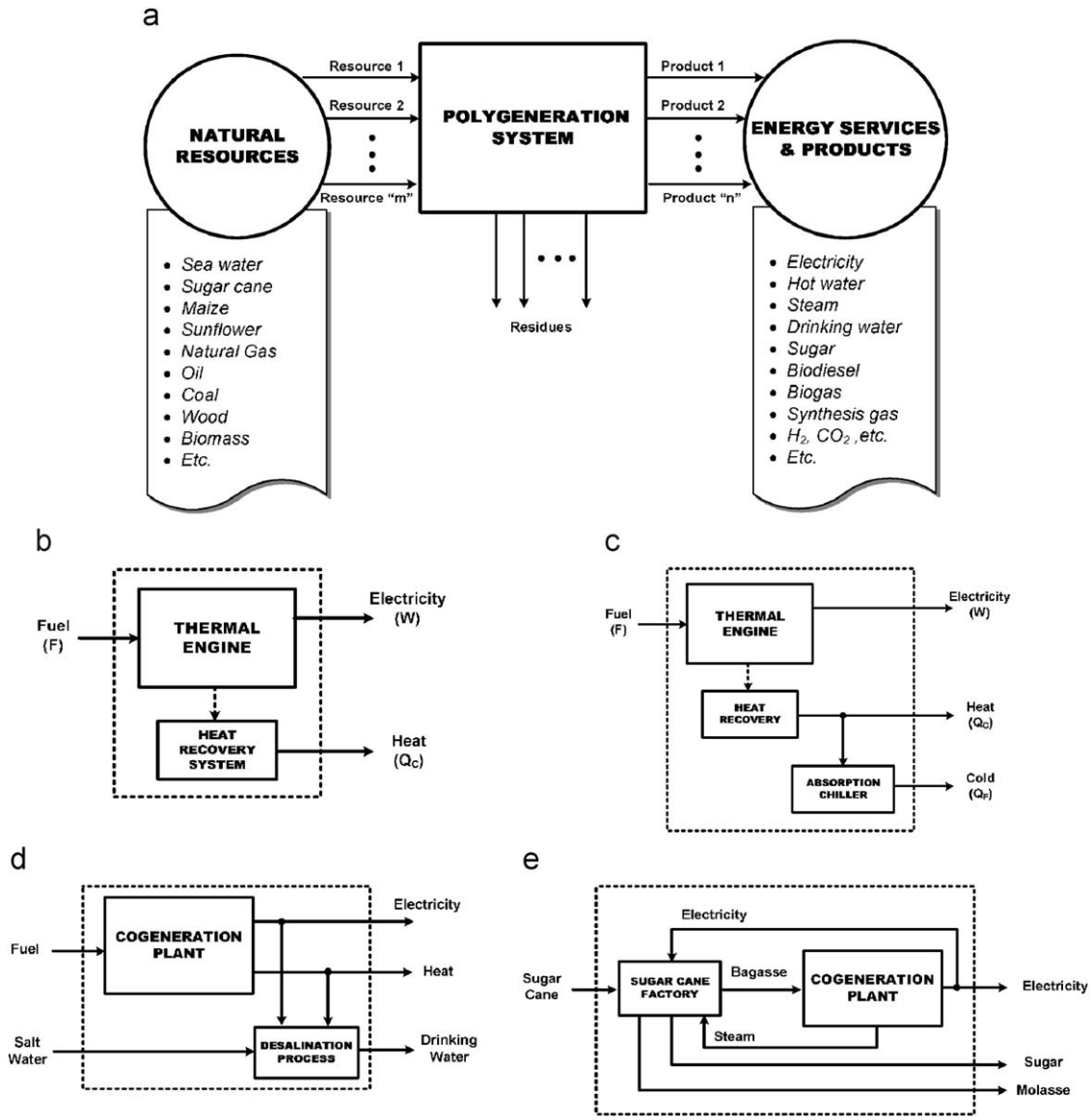

Fig. 1. Polygeneration systems: (a) polygeneration: multi-resource and multi-product transformation process; (b) cogeneration system; (c) trigeneration system; (d) combined production of water and energy and (e) combined production of sugar and energy.

[12,13], pinch analysis [14,15] and in the mathematical optimization techniques applied to process synthesis [16,17].

The pinch analysis method, initially oriented to heat recovery, has been one of the most important contributions to the field of process integration in general and to energy integration in particular [18–22]. The pinch method was developed by Linnhoff and coworkers [14] for its application at industrial level. It has been further developed and is currently one of the most renowned methods of energy integration, with several applications [15]. In a similarity with heat integration (connection of heat transfer with the difference in temperatures), a procedure for mass integration was developed connecting the mass transfer with the difference of concentration for a component. Therefore, the mass pinch and mass exchange networks were proposed [23,24], with applications to industrial processes in which mass transfer is involved [7,15,25]. A specific application of the mass pinch concept is the water pinch, developed for waste water treatment in order to reduce water consumption, by considering the possibility of its reuse, regeneration and recycle [26]. This methodology was integrated with energy minimization, combining pinch methodology for heat and mass transfer [27,28].

Exergy analysis combines the first and second law of thermodynamics and informs about the thermodynamic efficiency of a process [12,13]. Through exergy, which is a thermodynamic property, it is possible to compare different processes as well as mass and energy flows. Thus, exergy can be considered as a measurement of the thermodynamic value of mass and energy flow-streams and processes. It is not a conservative property and it is destroyed in irreversible processes. As a consequence, exergy destruction provides an evaluation of the consumption and degradation of natural resources that occur in a plant. Exergy analysis locates and quantifies the irreversibilities that appear in a productive process, allowing the identification of the most inefficient processes.

Thermoeconomic analysis combines economic and thermodynamic analysis by applying the concept of cost (an economic property) to exergy (a thermodynamic property). Several authors agree that exergy is the most adequate thermodynamic property to associate with cost, since it contains information from the second law of thermodynamics and accounts for energy quality [29]. The production process of a complex energy system can therefore be analyzed in terms of its economic profitability and

efficiency with respect to resource consumption. An economic analysis can calculate the cost of fuel, investment, operation and maintenance for the whole plant but does not provide a means to evaluate the single processes taking place in each individual equipment nor how to distribute the costs among them. On the other hand, thermodynamic (exergy) analysis calculates the efficiencies of the subsystems and locates and quantifies the irreversibilities but cannot evaluate their significance in terms of the overall production process. Thus, thermoeconomics assesses the cost of consumed resources, money and system irreversibilities in terms of the overall production process. Consumed resource costs involve the resources destroyed by inefficiencies and assists in determining how resources may be used more effectively to save energy. Money costs express the economic effect of inefficiencies and are used to improve the cost effectiveness of production processes. Assessing the cost of the several streams and processes in a plant helps in understanding the process of cost formation, from input resource(s) to final product(s). This process can solve problems in complex energy systems that are difficult to solve using conventional energy analysis, based only on the first law of thermodynamics (mass and energy balances only), such as (1) rational price assessment of plant products based on physical criteria; (2) optimization of specific process unit variables to minimize final product costs and save resource energy, i.e., global and local optimization; (3) detection of inefficiencies and calculation of their economic effects in operating plants, i.e., plant operation thermoeconomic diagnosis; (4) evaluation of various design alternatives or operation decisions and profit maximization; (5) energy audits. Specific examples of these applications explained in detail can be found in Refs. [30–32].

Thermoeconomic analysis techniques can be combined with environmental assessment tools [33–35], such as life cycle assessment (LCA), which provides environmental information with a global perspective. LCA is one of the most powerful, recognized and internationally accepted tools used to examine the environmental cradle-to-grave consequences of making and using products and services, by identifying and quantifying energy and material usage and waste discharges [36].

Polygeneration systems are complex systems that require appropriate energy process integration for their synthesis and design. In this respect, very often at some stage during process integration, optimization techniques will be required, which can be combined with thermodynamic, thermoeconomic and pinch analysis techniques. Optimization involves the search for a solution fulfilling an objective function (e.g., cost, environmental burden, thermodynamic efficiency), which is to be minimized or maximized. The search process is undertaken subject to the system model and restrictions, which exist in the form of equality or inequality mathematical expressions. Biegler and Grossmann [37] provide a general classification of mathematical optimization problems, followed by a matrix of applications that shows the areas in which these problems have been typically applied in process systems engineering. A review of solution methods is also provided for the major types of optimization problems for continuous and discrete variable optimization, including their extensions to dynamic optimization and optimization under uncertainty. When represented in algebraic form the formulation of discrete/continuous optimization problems, correspond to mixed-integer optimization problems that have the following general form:

$$\text{Min } z = f(x, y) \tag{1}$$

$$\text{s.t. } h(x, y) = 0 \tag{2a}$$

$$g(x, y) \leqslant 0$$
$$x \in X, y \in \{0, 1\}^m \tag{2b}$$

where $f(x, y)$ is the objective function (e.g., cost), $h(x, y) = 0$ are the equations that describe the performance of the systems (energy balances, production rates) and $g(x, y) \leqslant 0$ are inequalities that define the specifications or constraints for feasible plans and schedules. The x variables are continuous and generally correspond to state variables, while y are discrete, generally restricted to 0–1 values to define, for instance, the assignments of equipment and sequencing of tasks.

Mixed-integer programming methods are suitable for modeling and analyzing polygeneration energy systems towards design, investment planning and optimization [38]: this established algorithmic framework fulfills the requirements and captures the complexities of an investment planning procedure by considering the superstructure of all alternatives, representing all possible choices for a system through binary (0–1) variables, while all physical and economic quantities are expressed as continuous variables. All logical and physical relations are translated into equality or inequality constraints and the best plan is derived by conducting an optimization for a specific objective function.

Several approaches can be used when synthesizing a polygeneration system. Many authors address the optimization of multiple energy carriers in a more generalized way, by including solar energy in the supply side [39] or hydrogen as an energy vector [40]. On the other hand, polygeneration systems that simultaneously produce power, chemical products, and clean synthetic fuels from syngas (derived from coal, natural gas, coke, heavy oil or biomass) are attracting more and more attention [41,42].

The principles and future prospects of the optimization theory and algorithms for process integration are covered by several authors [16,17,25,37,43]. In this respect, the review of Chico and Mancarella [44], summarizes the characteristics of the optimization methods for polygeneration systems presented in recent journal publications, indicating the considered time scale, the objective function and solution method.

3. Case studies

The potential applications of polygeneration encompass many different industries and productive processes [6,11,38–42,45–55]. Some applications, such as cogeneration, have reached great dissemination and technological maturity. This paper presents very distinct applications of polygeneration: agro-food industry, residential sector and combined production of water and energy. With appropriate process integration, all three applications have in common the important savings of natural resources, with subsequent reduction of environmental burden.

3.1. Case study 1: integrated production of sugar, molasses and electricity

Sugarcane production is one of the most important economical activities in Brazil, mainly due its high efficiency and competitiveness. This sector comprises sugar factories, alcohol distilleries and integrated sugar and alcohol industries that produce both products from sugarcane. In this respect and in the scenario of a large scale production of bio-fuels (to reduce greenhouse gas emissions), Brazil is the world leader in bio-ethanol production due to the experience gained with the PROALCOOL program and to the favorable geographic and climatic conditions for the sugarcane culture, one of the most important raw materials for the

production of bio-ethanol. Furthermore, over the last few years, electricity is becoming a new additional product of sugarcane factories, since sugarcane bagasse can be used as a fuel in the cogeneration system of sugar and alcohol factories [55]. Currently almost all sugarcane industries in Brazil are self-sufficient in thermal, mechanical and electrical energy during the crushing season. Generally, low efficiency cogeneration systems based on a steam cycle with live steam at 22 bar and 300 °C [55] are found in these industries. Newly installed cogeneration systems operate with live steam generation pressure up to 60 bar and can attend its energy requirement and also produce surplus electricity that can be sold. The actual total electricity generation capacity installed in the sugarcane industries using bagasse in Brazil is approximately 2300 MW distributed in 221 production units [55]. An increase in the surplus power generated and sold to the grid can be accomplished with the installation of more efficient cogeneration systems, in association with investments towards the reduction of thermal energy demand in the production process, with optimization of factory layout and operational parameters. Moreover, these systems consume biomass as fuel, which is a renewable energy source, contributing to the substitution of the fossil fuels used for electricity generation, reducing greenhouse gas emissions.

The sugar production from sugarcane is accomplished in several steps, as shown in Fig. 2a:

- extraction of raw juice and separation of bagasse;
- clarification of raw juice through a heat process with addition of chemical reactants;
- concentration of clarified juice through evaporation of water content;
- treatment of syrup produced in the evaporation;
- boiling, crystallization and centrifugation, where crystal sugar and molasses are obtained;
- drying of crystal sugar.

The bagasse produced in the extraction system is delivered to the cogeneration system, as indicated in Fig. 2a, where it is used as fuel, to produce the electricity and steam consumed by the process. If there is surplus electricity, it can be sold to the grid.

Process integration methods can be employed to improve energy recovery in sugar and ethanol processes, allowing the increase of electricity generation by the cogeneration system. Several publications indicating the best options for thermal process integration in sugar processing are found in literature [56]. Some of these works use the pinch point method [55,57], the exergy analysis [55,58–60] or the thermoeconomic analysis of sugar factories [55,61].

The purpose of this case study is to analyze different options of cogeneration systems in sugarcane factories, so as to evaluate the possibilities of increasing the generation of electricity. A power plant analysis is performed in conjunction with the reduction of the steam demand in the sugar production process once the two systems are interlinked [55,61,62].

The sugarcane factory analyzed is located in the state of Sao Paulo, Brazil. It operates 185 days/year, processing 22,000 t of sugarcane per day, which represents 4,070,000 t/year. The production process requires saturated process steam (2.1 bar) and its optimized consumption is 335 kg of steam per ton of processed sugarcane [61]. The wet bagasse obtained in the mill as a by-product is approximately 228 kg/t of sugarcane. Tables 1 and 2 give the parameters considered in the different analyzed configurations. In the different configurations analyzed, it was assumed that the mills were driven by electrical engines and not steam turbines.

The three different configurations analyzed are described as follows:

Configuration #1: *Backpressure steam cycle* (Fig. 2b). It is based on a simple Rankine cycle, consisting of a bagasse-fuelled boiler and a backpressure steam turbine (see Fig. 2b). The turbine outlet steam has the adequate pressure to cover the energy services required in the sugarcane factory. This is the most common cogeneration system arrangement installed in most sugarcane factories in Brazil. The steam demand in the sugarcane factory is a limiting factor for the cogeneration system; therefore, very often, not all of the available bagasse is consumed.

Configuration #2: *Condensing steam cycle* (Fig. 2c). In this case the Rankine cycle is a condensing cycle. The condensing turbine uses part of the outlet steam from the backpressure turbine. This arrangement allows the increase of steam production in the boiler and the complete consumption of the available bagasse, increasing at the same time the electricity production. In this case it is assumed that the condenser operates at 0.085 bar.

Configuration #3: *Combined cycle* (Fig. 2d). This arrangement consists of a biomass gasifier, a gas turbine, a heat recovery steam generator and a steam turbine. The gasifier transforms the chemical energy of the bagasse into a fuel gas, which is then consumed in the gas turbine. The energy of the exhaust hot gases of the gas turbine is recovered in the heat recovery steam generator, producing steam at two different pressure levels (60 bar/510 °C steam expanded in the steam turbine and saturated process steam at 2.1 bar). In this case, the amount of bagasse obtained in the mill is not sufficient to produce the steam required in the various processes of the sugarcane factory. This system is not yet commercially available.

The operation of the three different configurations was simulated with the EES software [63]. The most relevant results are given in Table 3.

The three proposed arrangements take the maximum advantage of the consumed fuel. The overall energy efficiency decreases from configuration #1 to configuration #3, but it is very important to highlight the fact that the quality and the economic value of the total product increases, because the share of electricity production also increases. The most adequate configuration from an economic viewpoint depends on the market prices of bagasse and electricity. Configuration #2 produces a significantly higher amount of electricity (186,800 MWh/year) than configuration #1. This increase of electricity production is obtained by consuming 316,800 t/year of bagasse, which represents a virtual electrical efficiency of 28%. In the case of configuration #3, the surplus electricity production is 383,800 MWh/year higher than configuration #1; but it requires buying 50% more bagasse, totalling 618,000 t/year; however it presents the highest electrical efficiency, 30%. Up to now it has been a common practice in Brazil to use bagasse in low efficiency systems, but this practice has been changing over the last few years. Moreover, considering the production of surplus electricity, it must be noted that the Brazilian electricity production system is mainly based on hydropower, and that the harvesting period of sugarcane in the south region coincides with the dry season. Hence, cogeneration along this period would be particularly suitable. Therefore, it seems appropriate:

- to analyze configuration #2 in more detail and
- to develop the technology of bagasse gasification and also gas turbines suited to work with low calorific value biogas in order to implement configuration #3 in the future.

An important reduction of CO_2 emissions would be obtained if the additional electricity produced with bagasse is used to reduce the usage of fossil fuels.

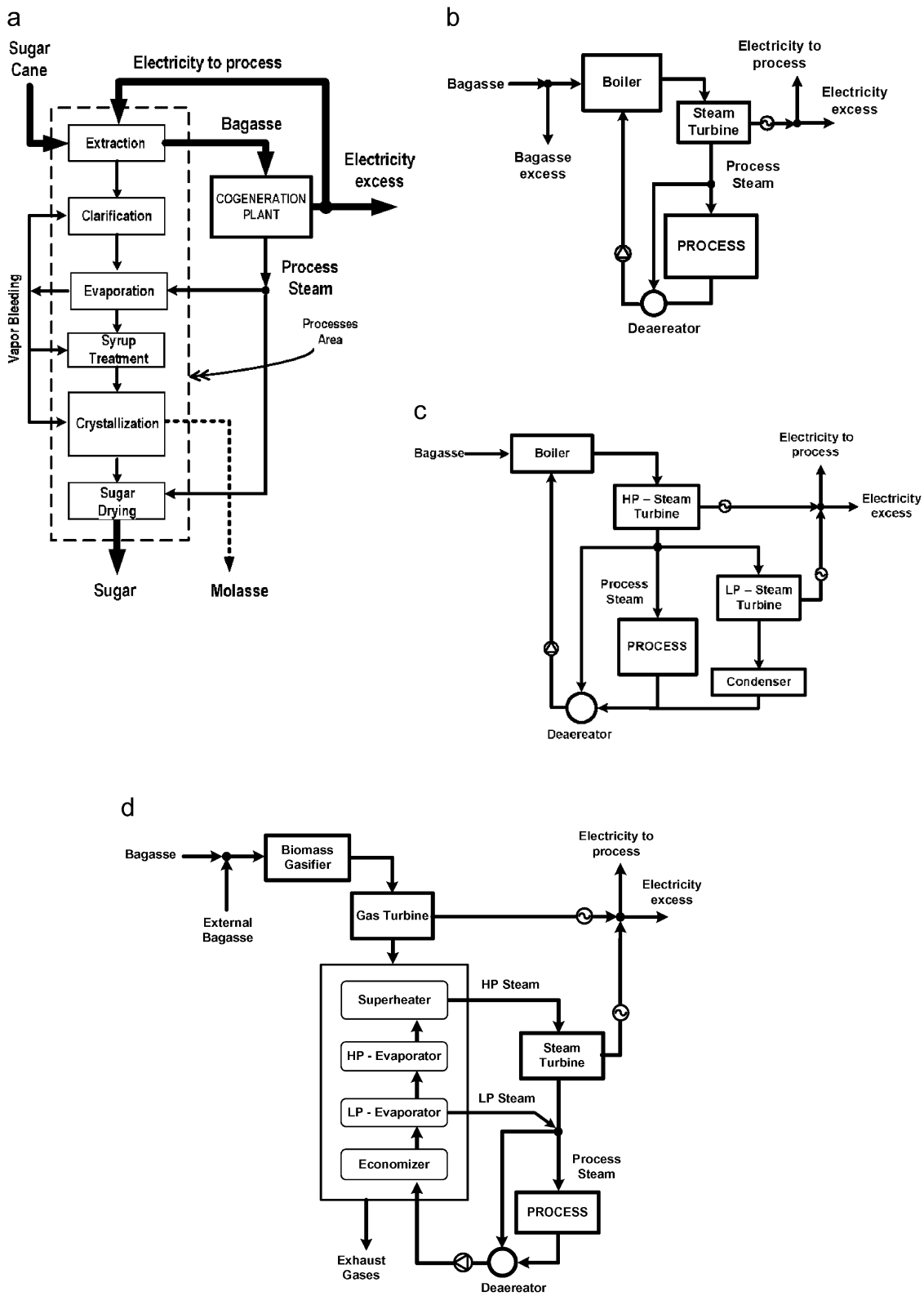

Fig. 2. Scheme of sugarcane production and different configurations of cogeneration systems integrated with the sugarcane factory: (a) diagram of integrated production of electricity, sugar and molasses; (b) configuration #1: backpressure steam cycle; (c) configuration #2: condensing steam cycle and (d) configuration #3: combined cycle (gas turbine+steam turbine).

3.2. Case study 2: integrating CHP into a DHC system

Buildings represent one of the dominant energy-consuming sectors in industrialized societies. Combined heat, cooling and power (CHCP) systems are interesting for the supply of different energy services in urban districts and in large buildings, particularly in warm areas such as Mediterranean countries. These systems utilize a fuel's energy better, as the cogenerated

Table 1
General parameters

Parameter	Value
Atmospheric air temperature (°C)	25
Atmospheric air presssure (bar)	1.013
Bagasse	
Moisture (%)	50
LHV (kJ/kg)	7500
Consumption	
Mechanical energy (kWh/t cane)	16
Electrical energy (kWh/t cane)	12
Saturated vapor 2.1 bar (kg/t cane)	335
Efficiency of equipment	
Steam turbine (isentropic)	0.80
Pump (isentropic)	0.80
Bagasse boiler (thermal)	0.85
Electric generator	0.96
Electric motor	0.89

Table 2
Parameters in configuration #3

Parameter	Value
Gasifier	
Syngas gas produced (N m^3/kg dry bagasse)	2.6
Gas LHV (kJ/N m^3)	4100
Electrical consumption (kWh/N m^3)	0.154
Gas turbine	
Pressure ratio	11
Gases temperature combustor outlet (°C)	1050
Expander isentropic efficiency	0.85
Compressor isentropic efficiency	0.85
Heat recovery steam generator	
ΔT pinch (°C)	10
ΔT approach (°C)	5

Table 3
Cogeneration plants performance

Configuration	Energy efficiency overall (%)	Bagasse (+) excess (−) shortage (t/year)	Electricity excess (MWh/year)
#1	84.2	(+) 316,400	119,300
#2	65.2	0	306,100
#3	56.9	(−) 301,600	503,100

heat can be used for heating in winter as well as for cooling in summer with an absorption refrigerator. Furthermore, the use of thermal energy storage (TES) provides an additional advantage, which is the coverage of variable thermal demands while the production system operates continuously at nominal conditions. Thus, energy supply systems integrating the technologies of cogeneration, absorption refrigeration and thermal storage can provide substantial benefits from economic, energy and environmental viewpoints.

The evaluation of potential CHCP applications requires an assessment of the operation and economics of a particular system in meeting the electric and thermal demands of a consumer. Given the electrical and thermal demands of the consumer, the tariff structure for grid-supplied electricity, the price of primary fuel (e.g., natural gas), the operation strategy and characteristics of the CHCP system, and an assumed set of installed CHCP system capacities (e.g., installed capacity of prime mover and absorption chiller), the cost of such a system can be determined (compared to the sole reliance on traditional, grid-supplied electricity and on-site boilers). In Henning [64], there is a brief description of some energy system optimization models, such as MODEST, used to study energy systems by employing linear programming to minimize capital and operation costs establishing the optimal technologies, sizes and scenarios for investments and the best system operation. A flexible time division can reflect demand peaks and also diurnal, weekly, seasonal, and long-term variations of demands, costs, capacities, etc. The MODEST model has been used to study energy supply and demand-side measures, primarily in municipal energy systems. In this second case study, two distinguished aspects, flow sheet synthesis (design aspects) and operational optimization (operation aspects) are combined. It is therefore necessary to determine the configuration and the capacities depending on the operation plan for each piece of equipment. This, however, is a generally very complex and difficult problem. Against this background, the conventional approach to this problem has been to establish rules beforehand for system operation, based on the follow-up of electric power, heat demand and so forth, and to carry out evaluations and system operation. Several computer programs have been developed to aid the designer, which differ from each other with respect to the range of applicability and depth of analysis. Software packages are a good start, but they tend to be either overly simple or extremely complicated, and sometimes not very flexible. Custom-built generic models that include different technologies, unit sizes, control modes, market restrictions and benefits, can be a complex and laborious process, but will be more transparent to the user [65].

This case study presents the application of a methodology developed to design the most appropriate system providing cold, heat and power to a residential area of approximately 5000 dwellings located in Zaragoza (Spain). Considered in the analysis are: conventional boilers, vapor compression and/or absorption refrigeration systems, cogeneration based on natural gas engines as well as TES [66]. Furthermore, the following factors, very important features of energy consumption in residential areas, have also been considered:

- simultaneous consumption of different energy services—lighting, electrical appliances, heating, cooling, etc.;
- variability of consumption (hourly, daily and monthly);
- different options of electricity contract.

The applied methodology is based on hourly economics and energy analysis of all possible arrangements of the equipment considered in a superstructure (Fig. 3a), able to satisfy the variable hourly demand (Fig. 3b) of energy—hot water, heating and cooling. The great number of feasible combinations to be evaluated have as a result a complex problem, not easy to solve.

Decisions are taken from mathematical models, based on mixed integer-linear programming (MILP) using the LINGO software [67], which includes a set of built-in solvers to tackle a wide variety of problems. These models allow the structural and operational optimization of cogeneration and trigeneration plants, also considering the possibility of implementing TES. In this respect, it is noteworthy to comment that in the past, an approach based on dynamic programming has been employed to conduct rationally the operational planning of energy systems with storage units. Another approach is based on a decomposition method for MILP problems with block angular structure [68].

The objective function considered in this second case study is the minimization of the total annual cost, including capital

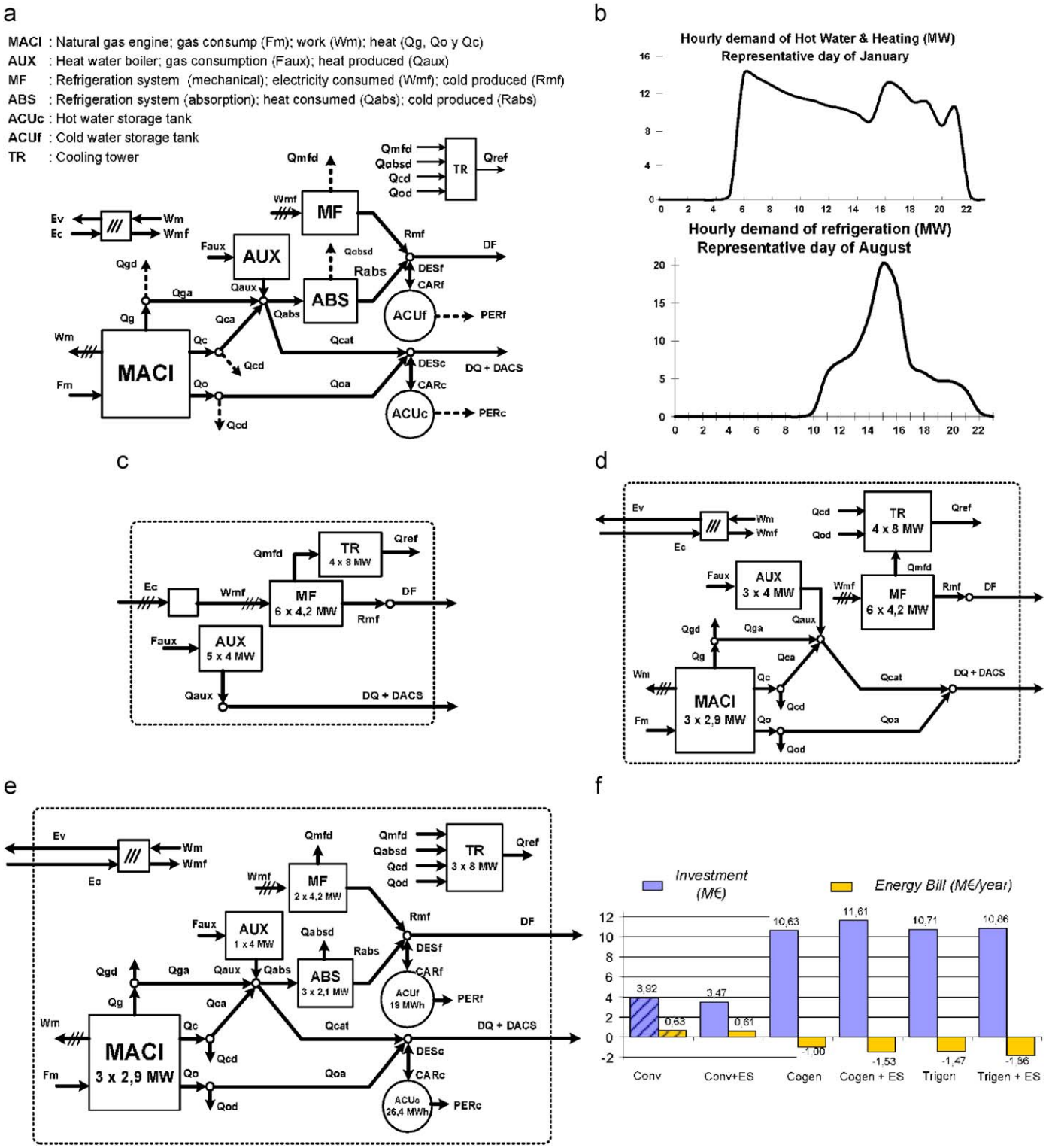

Fig. 3. Superstructure, arrangements and economy of the district CHP system: (a) superstructure of the energy plant; (b) thermal energy demand; (c) conventional system; (d) cogeneration system; (e) trigeneration system with thermal energy storage and (f) economy of energy integration.

amortization costs and maintenance and operation costs (energy expense, including the possibility of selling electricity to the grid).

Different levels of integration, shown in Fig. 3, have been considered: conventional system without energy integration (Fig. 3c); cogeneration system with integration of heat and power (Fig. 3d); trigeneration system with integration of cold, heat and power (Fig. 3e) considering the possibility, or not, of implementing energy storage systems.

The economic analysis is presented in Fig. 3f, considering that the surplus electricity production is sold to the grid. With respect to the conventional system (reference system), an additional investment of about 6.9×10^6 € allows the reduction of the annual energy bill of 1.6×10^6 € in the case of the cogeneration system

Table 4
Primary energy consumption for different configurations (MWh/year)

Conventional	Cogeneration	Cogeneration+energy storage	Trigeneration	Trigeneration+energy storage
38,160	11,527	6958	8241	5084

without energy storage, 2.2×10^6 € in the case of the cogeneration system with energy storage and approximately 2.5×10^6 € in the case of the trigeneration plant with energy storage. Note the important additional economic benefit obtained with energy storage systems. The investment can be recovered in less than 5 and 3 years, respectively (Fig. 3f).

Energy savings increase with the level of integration. Primary energy consumption is reduced almost 70% in the case of cogeneration, when compared to the conventional system (see Table 4). This saving is further increased (78%) in the case of the trigeneration system. It is also noteworthy to comment that absorption chillers and energy storage systems significantly increase the thermal energy produced in the cogeneration system, allowing full load operation of gas engines during the entire year [10]. This case study shows the important and very significant energy savings (more than 80%) and economic benefit that can be achieved in the residential sector with appropriate energy integration. According to the *EU Energy Performance of Buildings Directive* [69] the residential and tertiary sector, the major part of which is buildings, accounts for more than 40% of final energy consumption and this figure is expanding.

3.3. Case study 3: integrated production of water and energy

Fresh water resources scarcity are identified by the UN as the main causes of the world crisis that humankind will suffer during the next decades, particularly due to the increasing fresh water scarcity in many regions of the planet. Humans are presently using about 4000 km^3/year [70], the world's renewable fresh water resources being only 10,000 km^3/year[1] that can technically be used [71]. If the efficiency of fresh water use is not improved in the next years, the scenario of fresh water availability for all inhabitants of the world becomes a matter of concern. Figures show that, currently, 30% of the world's population is suffering water stress, 3 billion people lack appropriate water sanitation, 1.2 billion people lack potable water and only 12% of the world population uses approximately 85% of the total water consumed on the planet [72]. Thus, fresh water scarcity is already a problem in several regions of the planet and is beginning to be a problem in many others.

Desalination, which is of continuous increasing importance, is already a way to increase fresh water resources in many parts of the world and it represents a viable and very interesting alternative to increase such resources, especially if it is taken into account that more than 70% of the world lives less than 70 km from coastal areas. The 19th IDA Worldwide Desalting Plants Inventory [73] reports that a desalination capacity of approximately 47 million cubic meters was contracted since December 31, 2005. Although year-on-year growth rates are difficult to ascertain, by comparing the average annual capacity contracted between 2001 and 2005 with the average annual capacity contracted over the previous five years, it is suggested that the market for new capacities grows at the rate of 25% per year.

Nevertheless, desalination is an intensive energy process, usually driven by conventional energy sources (basically fossil fuels). On average, 3.5 l of oil are required per cubic meter of desalted seawater. As a consequence, to produce the total amount of desalted water in all facilities in the world, which represents about 0.4% of the fresh water used worldwide, a huge amount of energy is required—approximately equivalent to 0.5% of primary energy in terms of fossil fuels consumed globally [74]. To underline the importance of energy in desalination, if all water consumed in the world came from desalination plants, the oil required would surpass the current yearly oil consumption. Environmental problems associated to this energy consumption should also be taken into account in the near future. Thus, decreasing the production of whatever good or commodity, e.g. fresh water, also reduces the energy consumption. Therefore the future of desalination is closely linked to the problem of conventional energy source availability, its cost and possible depletion as well as the environmental impacts (including the trend to minimize CO_2 emissions in order to reduce the greenhouse effect). Furthermore, the associated economic costs of desalination (investment and operation costs), sometimes higher than conventional water supply techniques, could limit its expansion in less-developed countries, and consequently the gap between the First and Third World could be increased.

Table 5
Airborne emissions considering different integration arrangements of thermal desalination (MSF, MED) and RO (4 kWh/m^3) with energy systems

	kg CO_2/m^3 produced water	g NO_x/m^3	g NMVOC/m^3	g SO_x/m^3
MSF (TC–CB–EM)	23.41	28.30	8.20	28.01
MSF (CCC–EM)	9.41	10.88	3.13	11.34
MSF (DWH–EM)	1.98	4.46	1.27	14.96
MED (TC–EM)	18.05	21.43	6.10	26.31
MED (CCC–EM)	7.01	8.16	2.25	15.74
MED (DWH–EM)	1.19	2.53	0.62	19.59
RO (EM, 4 kWh/m^3)	1.78	4.05	1.15	11.13
RO (SC)	2.79	3.38	0.93	3.25
RO (ICE)	2.13	2.61	0.65	2.86
RO (CC)	1.75	2.05	0.59	2.79

TC: thermal consumption; CB: conventional boiler; CCC: cogeneration combined cycle; DWH: driven waste heat; SC: steam cycle; ICE: internal combustion engine; CC: combined cycle; EM: European model.

The present situation significantly demands more efficient solutions, for instance, process integration and the use of renewable energy sources to produce desalted water, in order to prevent more profound negative economic and social effects. Table 5 presents the results of an environmental analysis, using the LCA technique, exploring the potential of reducing the environmental impact of most commercial desalination technologies (see Fig. 4), through an appropriate integration with energy production systems. There is a significant potential to reduce the impact caused by desalination technologies, particularly distillation, when integrated with diverse energy production systems. A detailed analysis can be found in Ref. [75].

The results presented in Table 5 indicate that the environmental loads of desalination processes properly integrated with energy production systems can be considerably reduced. Thus, in thermal desalination technologies (MSF and MED) the reduction of their

[1] Earth's water cycle provides 42,700 km^3/year of renewable fresh water, being the total water reserves, including seawater and groundwater, 1386 Mkm^3.

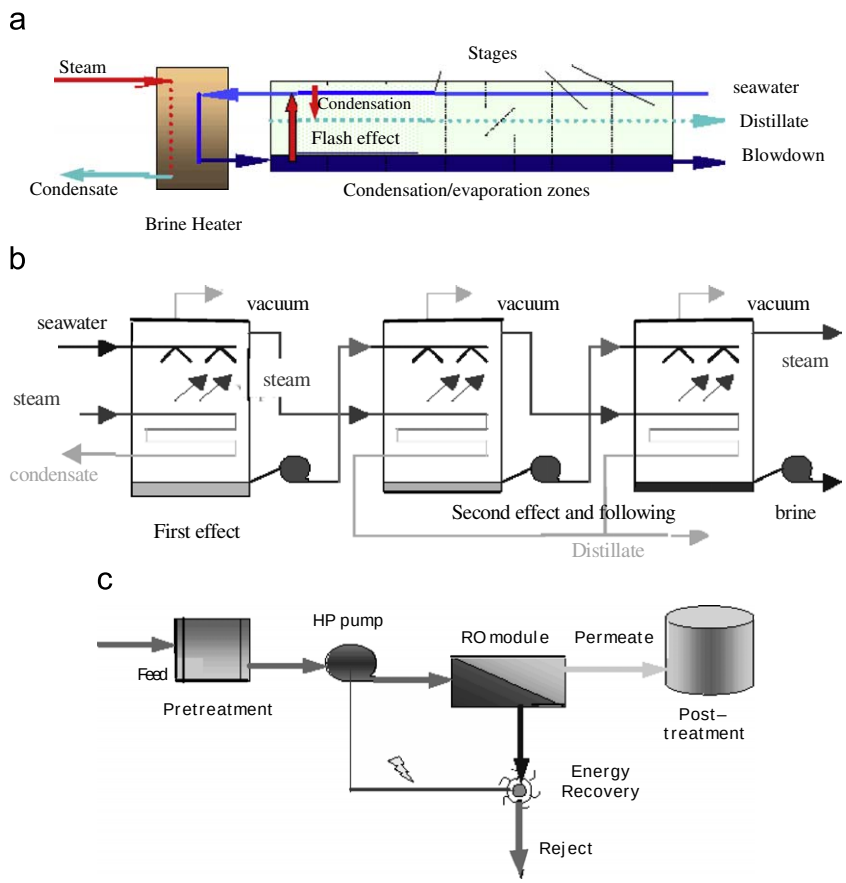

Fig. 4. Desalination technologies considered in the integration analysis: (a) multistage flash distillation (MSF); (b) multieffect distillation (MED) and (c) reverse osmosis (RO) desalination.

corresponding environmental loads is approximately 60% when operating in a dual plant based on a combined cycle. The reduction is even greater when thermal desalination plants are fully integrated in an industrial process taking advantage of the residual heats—in this case the loads decrease one order of magnitude and become similar to RO, which is clearly the desalination technology that causes the lowest environmental load.

In the case of RO, its environmental loads can also be significantly reduced depending on the origin of the electrical energy used. Thus, the associated environmental loads can be reduced by more than 35% depending on the technology in which electricity is produced: cogeneration, internal combustion engine or combined cycle.

When considering other technological possibilities for producing electricity not based on fossil fuels, the reduction of environmental loads could be even greater, approximately 80–85% when applying an electricity production model based mainly on renewable energies.

Water is a limited and scarce essential resource, for which production is closely related to energy [76,77], which in turn is also a limited resource. Both resources should be considered and dealt with in an integrated way in order to reach a more sustainable fresh water production.

4. Closure

Natural resources are limited and some are becoming scarce, e.g., fresh water or conventional energy sources. At the same time, most of the world population is still living under the poverty threshold, requiring important amounts of natural resources for their socio-economic development. More and more authors, scientists, Nobel laureates, intellectuals, consider that our present development path is unsustainable, requiring a very significant change both in cultural and technological dimensions [78].

When dealing with energy savings and reduction of natural resources consumption, the increase of the technology efficiency of separate systems or individual equipment is required; however, with the current state of the art technology in several fields, this approach is almost reaching its technological improvement limit (e.g., thermal energy systems). In other words, a considerable increase in investments will be required in order to achieve energy savings.

Polygeneration systems in which appropriate process integration has been achieved can increase very significantly the energy and material efficiency of production processes without a further technological breakthrough. For this reason, these systems usually represent a lower consumption of natural resources, decreased environmental burden and economic savings.

In this paper, attention has been focused on energy and environmental aspects. Three very distinct case studies of polygeneration systems have been presented and have achieved a very significant increase of energy efficiency in addition to other natural resources efficiencies, e.g., sugarcane, water. The potential economic benefits of polygeneration systems have also been illustrated.

In summary, it can be concluded that appropriate process integration allows a dramatic reduction in natural resources consumption. It is an under-utilized technique, very likely due to its high complexity in terms of design and operation, particularly when dealing with polygeneration systems. Furthermore, in many cases it requires multidisciplinary approaches as well as multidisciplinary teams for its development. Nevertheless, process integration presents very promising future applications that will be required to facilitate the switch from our current highly inefficient use of natural resources to a more efficient use of natural resources and thereby sustainable development.

Acknowledgments

The authors would like to express their gratitude to:

- The engineers, technicians and managers at Usina Cruz Alta, Guarani and Santa Isabel for available process data and FINEP, FAPESP, CAPES and CNPq for the financial support for the study presented in case study 1.
- Spanish National Plan for Scientific Research and Technological Development and Innovation (R&D&I), Projects: DPI 2003-00603, and ENE 2007-67122 for the financial support to develop the study presented in case study 2 and Project: REN 2001-0292 for the financial support to develop the study presented in case study 3.

References

[1] United Nation. Document A/RES/55/2: United Nations millennium declaration, September 2000. See also 〈http://www.un.org/millennium/declaration/ares552e.pdf〉.
[2] Brown LR. Plan B 2.0. New York: Earth Policy Institute, W.W. Norton & Company; 2006.
[3] WWF. Living planet report 2006, October 2006. See also 〈http://www.footprintnetwork.org/newsletters/gfn_blast_0610.html〉.
[4] International Energy Agency. Key world energy statistics 2007. See also 〈http://www.iea.org/Textbase/stats/index.asp〉.
[5] CETS and DEPS. Vision 21 fossil fuel options for the future, Washington, DC: National Academy Press; 2000. See also 〈http://www.netl.doe.gov/publications/proceedings/01/vision21/vision21-01.html#Forward〉.
[6] Liu P, Gerogiorgis DI, Pistikopoulos EN. Modeling and optimization of polygeneration energy systems. Catal Today 2007;127:347–59.
[7] Smith R. Chemical process design and integration. Chichester: Wiley; 2005.
[8] Petchers N. Combined heating, cooling & power handbook: technologies and applications, an integrated approach to energy resource optimization. Fairmont, 2003.
[9] Favrat D, Kraines S, et al. Towards more sustainable energy systems. In: Pathways to our common future, Proceedings of the alliance for global sustainability annual meeting, Barcelona, 18–21 March; 2007. p. 39–40.
[10] Lozano MA, Ramos J, Monzón R. Optimización de sistemas de cogeneración para calefacción y refrigeración de distrito. An Ing Mec 2004;2(15):1385–93 [in Spanish].
[11] Uche J, Serra LM, Sanz A. Integration of desalination with cold–heat–power production in the agro-food industry. Desalination 2004;166:379–91.
[12] Kotas T. The exergy method of thermal plant analysis. New York: Krieger Publishing Company; 1995.
[13] Szargut J. Exergy method: technical and ecological applications. UK: Wit Press; 2005.
[14] Linnhoff B, Townsend DW, Boland D, Hewitt DF, Thomas BEA, Guy AR, et al. User guide on process integration for the efficient use of energy, Institution of Chemical Engineers. Rugby, UK: IchemE; 1982.
[15] Kemp IC. Pinch analysis and process integration. A user guide on process integration for the efficient use of energy. 2nd ed. Butterworth-Heinemann/Elsevier; 2007.
[16] Biegler L, Grosmann IE, Westerberg AW. Systematic methods of chemical process design. Englewood Cliffs, NJ: Prentice-Hall; 1997.
[17] Floudas CA. Deterministic global optimization. Dordrecht: Kluwer Academic Publishers; 1999.
[18] Hohmann EC. Optimum networks for heat exchange. PhD thesis, University of Southern California, 1971.
[19] Umeda T, Itoh J, Shiroko K. Heat exchange system synthesis. Chem Eng Progr 1978;74:70–6.
[20] Umeda T, Harada T, Shiroko K. A thermodynamic approach to the synthesis of heat integration systems in chemical processes. Comput Chem Eng 1979;3:273–82.
[21] Linnhoff B, Flower JR. Synthesis of heat exchanger networks: I. Systematic generation of energy optimal networks. AIChE J 1978;24:633–42.
[22] Linnhoff B, Flower JR. Synthesis of heat exchanger networks: II. Evolutionary generation of networks with various criteria of optimality. AIChE J 1978;24:643–54.
[23] El-Halwagi MM, Manousiouthakis V. Synthesis of mass exchange networks. AIChE J 1989;35(8):1233–44.
[24] El Halwagi MM. Pollution prevention through process integration. Academic Press, Elsevier; 1997.
[25] El Halwagi MM. Process integration, process systems engineering series, vol. 7. Academic Press/Elsevier; 2006.
[26] Wang YP, Smith R. Wastewater minimization. Chem Eng Sci 1994;49(7):981–1006.
[27] Savulescu L, Kim JK, Smith R. Studies on simultaneous energy and water minimisation. Part I: systems with no water re-use. Chem Eng Sci 2005;60:3279–90.
[28] Savulescu L, Kim JK, Smith R. Studies on simultaneous energy and water minimization. Part II: systems with maximum water re-use. Chem Eng Sci 2005;60:3291–308.
[29] Sciubba E, Wall G. A brief commented history of exergy from the beginning to 2004. Int J Thermodyn 2007;10(no. 1):1–26.
[30] Lozano MA, Valero A. Theory of the exergetic cost. Energy 2003;18(9):939–60.
[31] Bejan A, Tsatsaronis G, Moran M. Thermal design and optimization. New York: Wiley; 1996.
[32] El-Sayed YM. The thermoeconomics of energy conversion. Oxford: Elsevier; 2003.
[33] Serra LM. Sobre la distribución de los recursos y su consumo en los sistemas productivos, Análisis y aplicaciones Department of Mechanical Engineering. Spain: University of Zaragoza, Zaragoza; 2007.
[34] Tsatsaronis G. Exergoeconomics and Exergoenvironmental Evaluation of Energy Systems. In: Fourth international conference on sustainable development of energy, water and environment systems (special session: thermodynamics and the destruction of resources), Dubrovnik, Croatia, 4–8 June 2007.
[35] Wang LM, Ni WD, Li Z. Exergy and life cycle assessment of polygeneration systems. In: Proceedings of ECOS 2006, Crete; 2006. p. 807–13.
[36] Guinee JB, editor. Handbook on life cycle assessment. Operational guide to the ISO standards. Dordrecht: Kluwer Academic Publishers; 2002.
[37] Biegler LT, Grossmann IE. Retrospective on optimization. Comput Chem Eng 2004;28:1169–92.
[38] Liu P, Gerogiorgis DI, Pistikopoulos EN. Modeling and optimization of polygeneration energy systems. Catal Today 2007;127:347–59.
[39] Lindenberger D, Bruckner T, Groscurth HM, Kümmel R. Optimization of solar district heating systems: seasonal storage, heat pumps and cogeneration. Energy 2000;25:591–608.
[40] Aki H, Yamamoto S, Kondoh J, Maeda T, Yamaguchi H, Murata A, et al. Fuel cells and energy networks of electricity, heat, and hydrogen in residential areas. Int J Hydrogen Energy 2006;31:967–80.
[41] Gao L, Li H, Chen B, Jin H, Lin R, Hong H. Proposal of a natural gas-based polygeneration system for power and methanol production. Energy 2008;33:206–12.
[42] Yamashita K, Barreto L. Energyplexes for the 21st century: coal gasification for co-producing hydrogen, electricity and liquid fuels. Energy 2005;30:2453–73.
[43] Grossmann IE, Biegler LT. Part II. Future perspective on optimization. Comput Chem Eng 2004;28:1193–218.
[44] Chico G, Mancarella P. Distributed multi-generation: a comprehensive view. Renes Sustain Energy Rev 2007, doi:10.1016/j.rser.2007.11.014.
[45] Gassner M, Maréchal F, Favrat D. Optimal process design for thermochemical biofuel production plants. In: Pathways to our common future. Proceedings of the alliance for global sustainability annual meeting 2007, Barcelona, 18–21 March 2007. p. 183.
[46] Verda V, Cali M, Orsello G. Solid oxide fuel cell systems for distributed power generation and cogeneration. In: Fourth Dubrovnik conference on sustainable development of energy, water and environment systems, Dubrovnik, 4–8 June 2007.
[47] Moro R, Pinamonti P, Reini M. ORC technology for waste wood to energy conversion in the furniture manufacturing industry. In: Fourth Dubrovnik conference on sustainable development of energy, water and environment systems, Dubrovnik, 4–8 June 2007.
[48] Ensinas AV, Modesto M, Nebra SA, Serra LM. Exergy loss minimization in a sugarcane industry with integrated sugar, ethanol and electricity production, In: Fourth Dubrovnik conference on sustainable development of energy, water and environment systems, Dubrovnik, 4–8 June 2007.
[49] Wang Z, Zheng D, Jin H. A novel polygeneration system integrating the acetylene production process and fuel cell. Int J Hydrogen Energy 2007;32:4030–9.
[50] Weber C, Marechal F, Favrat D, Kraines S. Optimization of a SOFC based decentralized polygeneration system for providing energy services in an office building in Tokyo. Appl Thermal Eng 2006;26:1409–19.
[51] Li H, Gao L, Chen B, Jin H, Lin R, Hong H. Proposal of a natural gas based polygeneration system for power and methanol production. In: Proceedings of ECOS 2006, Crete, July 2006. p. 679–86.

[52] Gao L, Jin H, Liu Z, Zheng D. Exergy analysis of coal based polygeneration system for power and chemical production. Energy 2004;29:2359–71.
[53] Lin H, Gao L, Jin H, Han W. Economic analysis of coal based polygeneration system for methanol and power production. In: Proceedings of ECOS08, Krakow, June 2008. p. 1709–16.
[54] Franzoni A, Galanti L, Traverso A, Massardo AF. Integrated systems for electricity and hydrogen co-production from coal and biomass. In: Proceedings of ECOS08, Krakow, June 2008. p. 1717–24.
[55] Ensinas A. Integraçao Termica e otimizaçao termoeconômica aplicadas ao processo industrial de produçao de açúcar e etanol a partir da cana de açúcar, Tese de doutorado. Facultade de Engenharia mecânica. Brasil: Universidade Estadual de Campinas; 2008.
[56] Rein P. Cane sugar engineering. Berlin: Verlag Dr. Albert Bartens KG; 2007.
[57] Christodoulou P. The pinch technology and the energy reduction in the beet sugar process. Zuckerind 1992;117(3):169–75.
[58] Guallar J. Exergetic analysis and process thermal integration in the sugar industry (Analisis exergetico e integracion termica de processos en la industria azucarera). Tesis Doctoral, University of Zaragoza, Zaragoza, Spain, 1987 [PhD thesis, in Spanish].
[59] Tekin T, Bayramoglu M. Exergy analysis of the sugar production process form sugar beets. Int J Energy Res 1998;22:591–601.
[60] Bayrak M, Midilli A, Nurveren K. Energy and exergy analyses of sugar production stages. Int J Energy Res 2003;27:989–1001.
[61] Ensinas AV, Nebra SA, Lozano MA, Serra LM. Design of evaporation systems and heaters networks in sugarcane factories using a thermoeconomic optimization procedure. Int J Thermodyn 2007;10(3):97–105.
[62] Ensinas AV, Nebra SA, Lozano MA, Serra LM. Analysis of cogeneration systems in sugarcane factories. In: Proceedings of ECOS 2006, Crete, July 2006, p. 1177–84.
[63] F-Chart Software. EES: engineering equation solver 〈http://www.fchart.com〉.
[64] Henning D. MODEST—an energy-system optimisation model applicable to local utilities and countries. Energy 1997;22(12):1135–50.
[65] Hinojosa L R, Day AR, Maidment GG, Dunham C, Kirk P. A comparison of combined heat and power feasibility models. Appl Thermal Eng 2007;27(№ 13):2166–72.
[66] Lozano MA. Diseño óptimo de sistemas simples de cogeneración. Inf Tecnol 2001;12(№ 4):53–8.
[67] LINDO Systems. LINGO: the modeling language and optimizer 〈http://www.lindo.com〉.
[68] Yokoyama R, Ito K. A revised decomposition method for MILP problems and its application to operational planning of thermal storage systems. J Energy Resour Technol 1996;118(№ 4):277–84.
[69] Directive 2002/91/EC on the energy performance of buildings. Official J EC, 4.1.2003; L1: p. 65–71.
[70] World Water Council. World water vision, making water everybody's business. London: Earthscan; 2000.
[71] Shiklomanov V. World water resources. A new appraisal and assessment for the 21st century. Paris: UNESCO; 1998.
[72] Freshwater action network NGO guide to the water-dome, the world summit on sustainable development and international water policy. In: World summit on sustainable development, Johannesburg; 2002.
[73] Global water intelligence. In: 19th IDA worldwide desalting plants inventory, 2006.
[74] Serra LM, Uche J, Raluy RG. Integrated energy, economic and environmental analysis of combined power and desalination plants. In: International symposium towards innovative desalination and power generation in Kuwait, Kuwait Foundation for the Advancement of Sciences, Kuwait, 9–11 December 2007.
[75] Raluy RG, Serra LM, Uche J, Valero A. Life cycle assessment of desalination technologies integrated with energy production systems. Desalination 2004;167:445–58.
[76] Uche J. Thermoeconomic analysis and simulation of a combined power and desalination plant. PhD thesis, Department of Mechanical Engineering, University of Zaragoza, Spain, 2000.
[77] Husain A. Integrated power and desalination plants. Oxford: EOLSS Publishers; 2003.
[78] Meadows D. What path can bring humanity peacefully back down below the limits to growth? In: Pathways to our common future. In: Alliance for global sustainability annual meeting 2007, Barcelona, 18–21 March 2007.